PLEASE READ BEFORE STARTING INSTALLATION!

RACE CHIP



S

User Manual

Jeep Cherokee (KL) 2.0T

Contents

1 Scope of delivery ..... *A*

2 Overview of the RaceChip ..... *B*

3 Installation ..... *C*

4 Fine tuning ..... *D*

5 Trouble Shooting ..... *E*

6 Contact ..... *F*

Overview and explanation of symbols

⚠ **Warnings** and important information – **please read!**

General information on installation and use

Tips to assist installation and use

1 Scope of delivery

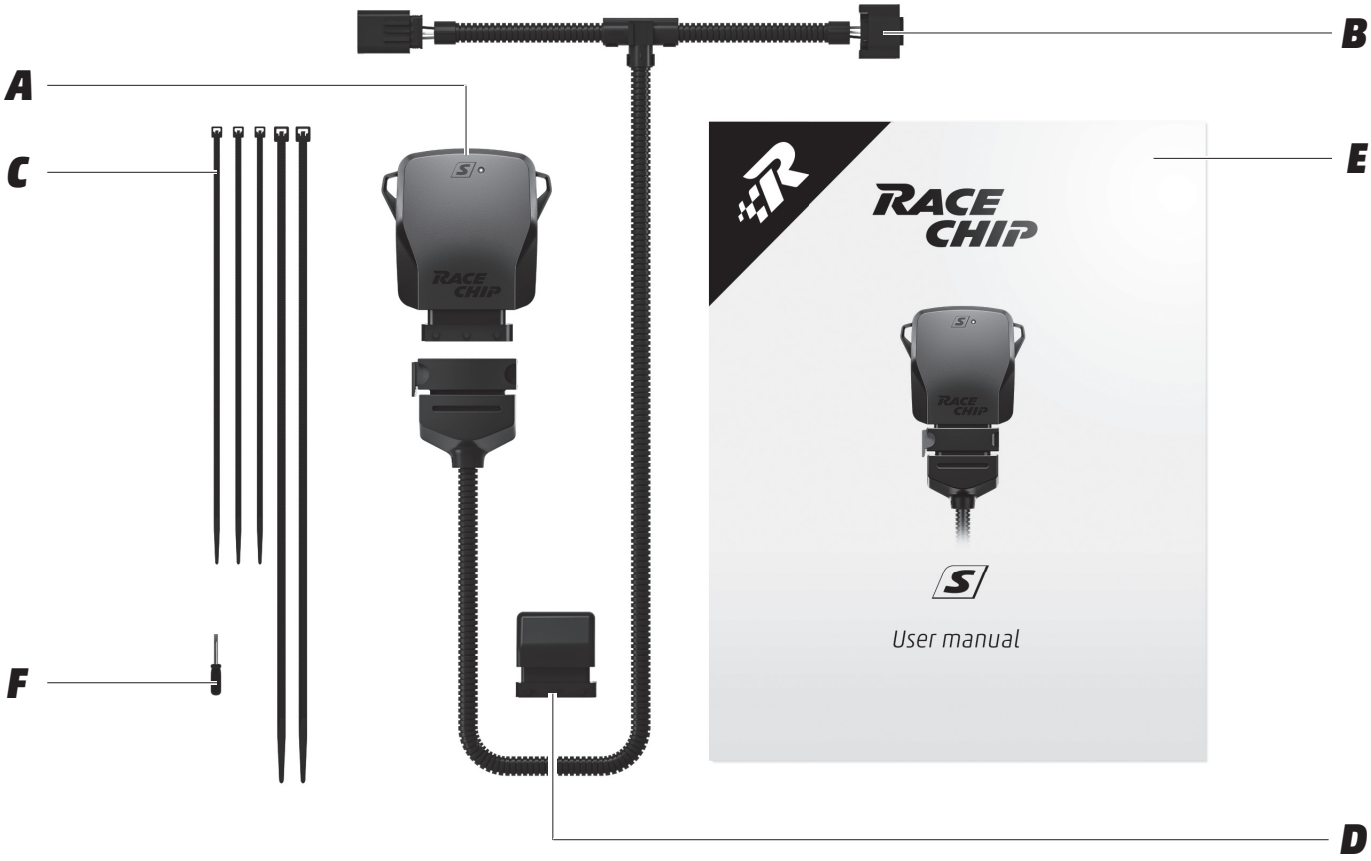

A ***RaceChip S***
calibrated specifically for your vehicle

B ***Wiring harness***
automobile-grade, compatible with your vehicle [1]

C ***Cable ties***
2 x long cable ties
3 x short cable ties

D ***Deactivation plug***
returns your engine to stock tune

E ***User Manual***
installation and operation

F ***Screwdriver***
for selecting mappings on the rotary control

[1] Picture may differ from delivered product.

2 Der RaceChip im Überblick

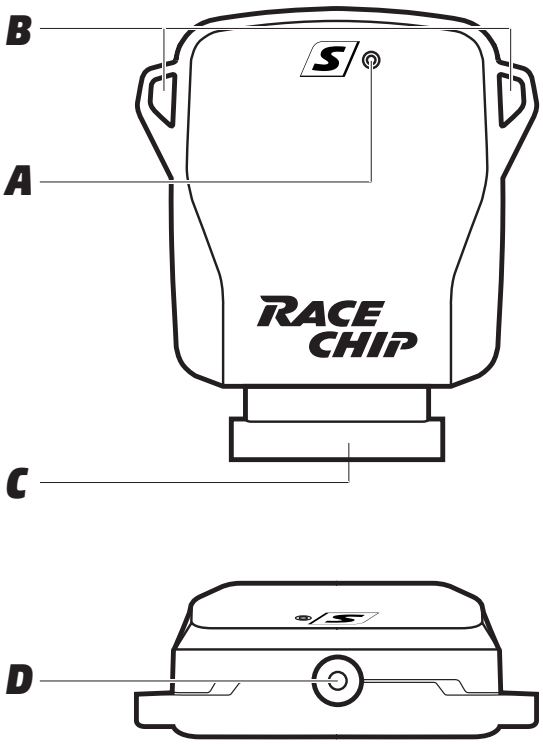

A Power ON light; lights only when the vehicle ignition is on and power is being supplied to the RaceChip.

B Eyelets for fixing RaceChip S in the engine compartment.

C FCI plug for connecting to the vehicle's wiring.

D Rotary control for selecting mappings (see ***Fine tuning***)

3 Installation DE/EN

DE: Schritt 1 von 7 – Vorbereitung der Installation

⚠ **Lassen Sie bitte vor dem Einbau des RaceChip den Motor abkühlen. Es besteht sonst gegebenenfalls Verbrennungsgefahr.**

1 Öffnen Sie die Motorhaube Ihres Fahrzeugs und verriegeln Sie die Türen.

2 **Warten Sie ca. 15 min** bevor Sie mit ***Schritt 2*** fortfahren, da sich alle Stromverbraucher ausschalten müssen.

In der Regel benötigen Sie für den Einbau kein spezielles Werkzeug. Falls doch, dann verdeutlichen wir dies am jeweiligen Installationsschritt auf den Folgeseiten. Ein Seitenschneider ist meist hilfreich, um Reste der Kabelbinder nach der Installation zu entfernen.

i

- Bei **Keyless Go** zu beachten: Schlüssel nach dem Verriegeln außerhalb der Funkreichweite (ca. 10 m vom Auto) platzieren.
- Bei einer Alarmanlage zu beachten: Alarmanlage vor dem Einbau deaktivieren.
- Es kann sein, dass sich Ihr Auto bei geöffneter Motorhaube **nicht komplett verriegeln lässt** und dadurch die Stromverbraucher aktiv bleiben. Drücken Sie in einem solchen Fall den Schließer der Motorhaube in die Aufnahme und verriegeln Sie Ihr Auto erneut und warten ca. 15 min. Lösen Sie in einem solchen Fall vor dem Schließen der Motorhaube nach dem Einbau einmal den Motorhaubenöffner.
- Sollten im Laufe der Installation Fragen oder Probleme auftauchen, so finden Sie unter ***Fehlerbehebung*** erste Hilfestellungen.
- Natürlich steht Ihnen auch unser Kundenservice stets gerne zur Seite. Mehr unter ***Kontaktdaten***.

EN: Step 1 of 8 – Preparation

⚠ **Before installing the RaceChip, please wait for your engine to cool down. Otherwise there is a risk of sustaining burns**

1 Open your vehicle's bonnet, and close and lock the doors

2 **Wait about 10 minutes** before starting **Step 2,** as all current consumers must have switched themselves off.

Generally speaking, you do not require special tools to perform the installation. If you need a tool, we will tell you when you get to the relevant step in these instructions. You will probably find wire cutters useful for clipping off the loose ends of cable ties.

i

- For cars with **"Keyless Go"**: after locking the car, place the key out of signal range (about 10 m from the car).
- If an **alarm system** is fitted: disable the alarm before starting installation.
- Some cars **will not lock completely** if the bonnet is open and electrical consumers are still active. If this is the case with your car, push the bonnet catch over manually, lock the car again and wait ca. 15 minutes. When you have finished the installation, do not forget to release the catch again by pulling the bonnet release lever.
- If you have any questions or difficulties during the installation, please refer to Trouble Shooting for hints and tips.
- Our Customer Service is of course always ready to help. See **Contact** for details

3 Installation IT/FR

IT: Fase 1 di 7 – preparazione dell'installazione

⚠ **Fai raffreddare il motore prima del montaggio del RaceChip. Può esistere il pericolo d'incendio**

1 Apri il cofano del motore del tuo veicolo e tieni chiuse le porte

2 **Attendere circa 10 minuti** prima di proseguire con la **fase 2**, poiché tutta la strumentazione elettrica deve essere disattivata.

Normalmente per l'installazione non hai bisogno di attrezzi speciali. Se tuttavia ne avessi bisogno, allora ti illustriamo la procedura nel relativo passaggio d'installazione nelle pagine seguenti. Di solito serve un tronchese per rimuovere i resti delle fascette dopo l'installazione.

i

- Con **„Keyless Go"** fare attenzione a tenere la chiave a una distanza adeguata (ca. 10 metri dalla vettura) per essere al di fuori della copertura radio
- In caso di presenza di un impianto antifurto, disattivare l'antifurto prima di iniziare il montaggio.
- È possibile che la tua auto **non si chiuda completamene** in caso di cofano del motore aperto e che in questo modo gli utilizzatori di energia rimangano attivi. In questo caso premi il dispositivo di chiusura del cofano del motore nell'inserimento, chiudi di nuovo la tua auto e aspetta circa 15 minuti. In una simile situazione prima di chiudere il cofano del motore dopo l'installazione, disattiva una volta l'apertura del cofano del motore
- Se dovessero sorgere in fase d'installazione domande o problemi, puoi trovare supporto su **Rimozione degli errori**.
- Naturalmente anche la nostra assistenza clienti è sempre a tua disposizione. Maggiori informazioni su **dati di contatto**.

FR: Étape 1 sur 7 – Préparation du montage

⚠ **Laissez le moteur de votre véhicule refroidir avant de procéder au montage du boîtier RaceChip afin d'écarter tout risque de brûlure.**

1 Ouvrez le capot de votre véhicule et verrouillez-en les portières.

2 **Attendez environ 10 mn**. avant de passer à **l'étape 2** de manière à ce que tous les éléments consommateurs d'électricité s'éteignent.

En règle générale, aucun outil particulier n'est nécessaire pour procéder au montage. Dans le cas contraire, nous le préciserons lors des étapes correspondantes au cours des pages suivantes. Une pince coupante s'avère bien souvent utile pour enlever les parties superflues des attache-câbles

i

- Système **« Keyless Go »** : Après le verrouillage, placez la clé hors de la portée radio (environ à 10 m de la voiture).
- **Système d'alarme** : Désactivez l'alarme avant le montage.
- Il est possible que votre voiture ne se laisse pas totalement verrouiller lorsque le capot est ouvert et que certains composants continuent donc à consommer de l'électricité. Dans ce cas, actionnez le loqueteau du mécanisme de fermeture du capot, verrouillez votre voiture puis attendez environ 15 mn. Une fois le montage du boîtier effectué, n'oubliez pas de relâcher le mécanisme de fermeture avant d'abaisser le capot.
- Si jamais vous rencontrez des difficultés ou si avez des questions pendant l'installation, veuillez consulter la rubrique **Dépannage.**
- Notre service client se tient bien entendu à votre disposition pour vous aider. Veuillez consulter la rubrique **Coordonnées.**

3 Installation



DE: Variante mit quer eingebautem Motor

EN: Transversely mounted engine variant

IT: Variante con motore montato trasversalmente

FR: Variante moteur monté transversalement

3 Installation

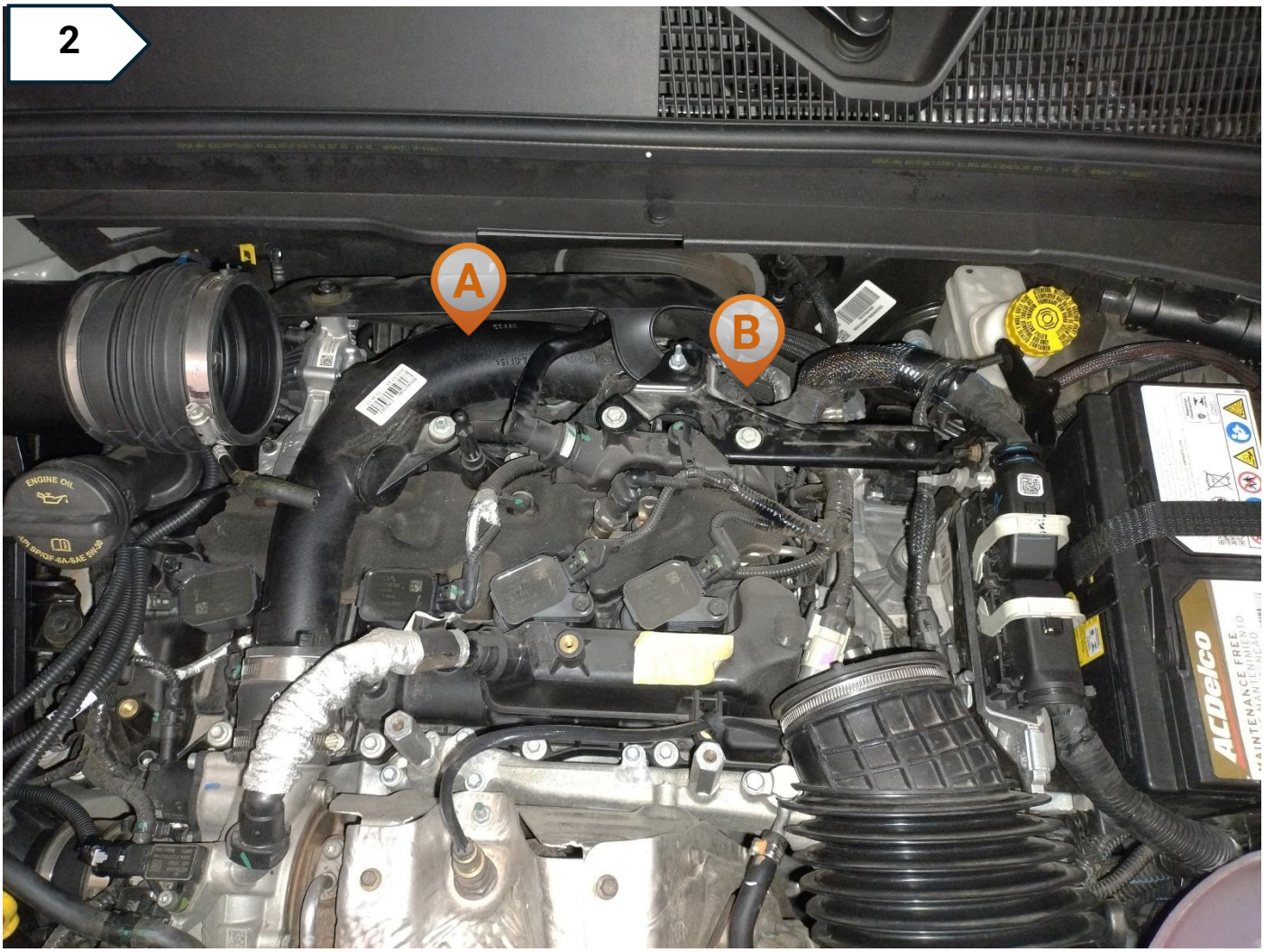

DE:
Entfernen Sie das Luftfiltergehäuse, um Zugang zu den Sensoren A und B zu erhalten.

EN:
Remove air filter assembly to access sensors A, B.

IT:
Rimuovere il gruppo del filtro dell'aria per accedere ai sensori A e B.

FR:
Retirez l'ensemble du filtre à air pour accéder aux capteurs A et B.

3 Installation

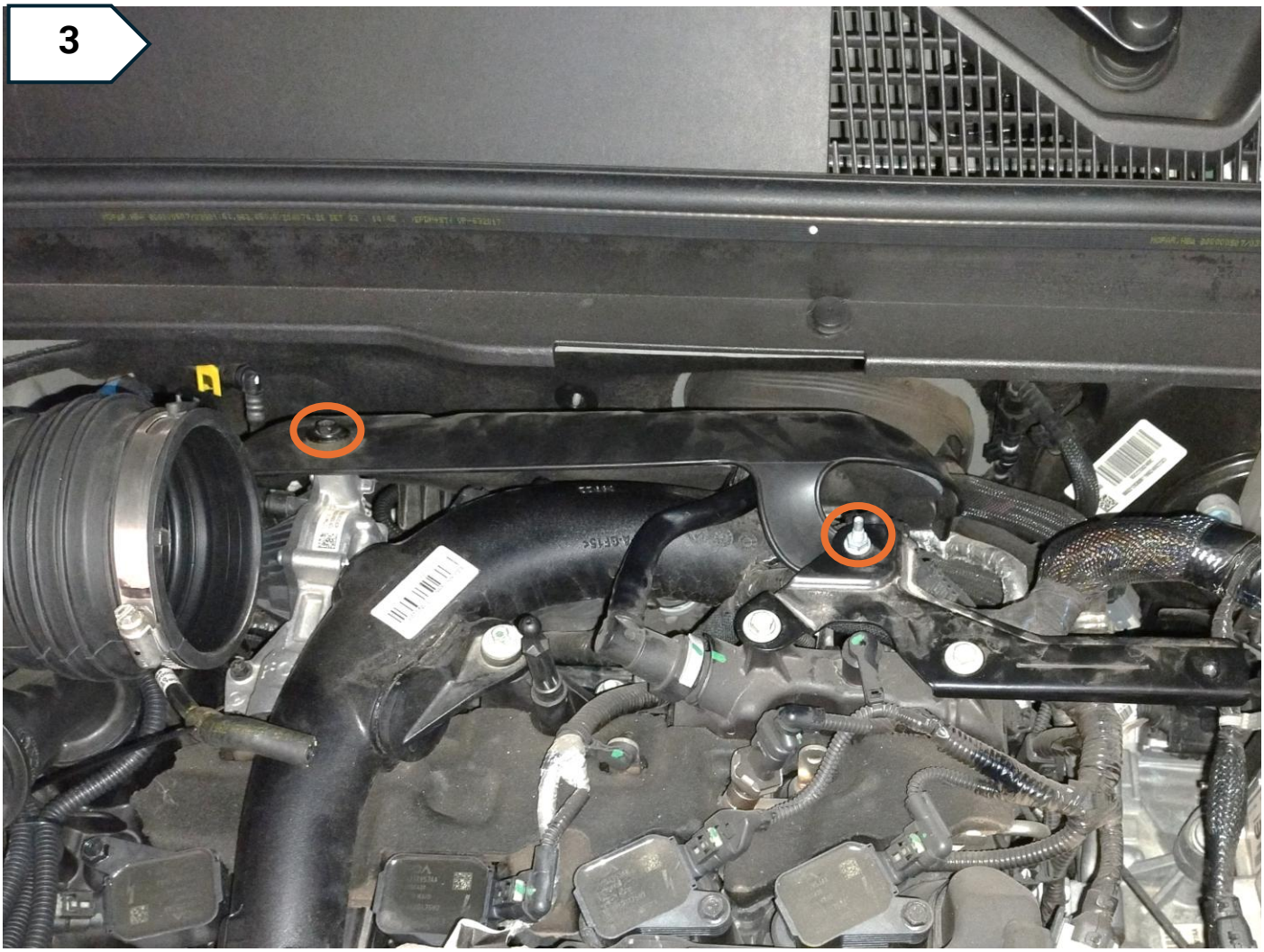

DE:
Entfernen Sie die zwei 10-mm-Schrauben, um die Schalldämmverkleidung zu lösen und Zugang zum Saugrohrdrucksensor (A) zu erhalten.

EN:
Remove 2x 10mm bolt to loosen sound insulation trim, to access sensor A - Manifold Pressure Sensor.

IT:
Rimuovere i 2 bulloni da 10 mm per allentare il rivestimento insonorizzante e accedere al sensore di pressione del collettore (A).

FR:
Retirez les 2 boulons de 10 mm pour desserrer la garniture d'isolation acoustique afin d'accéder au capteur de pression du collecteur (A).

3 Installation

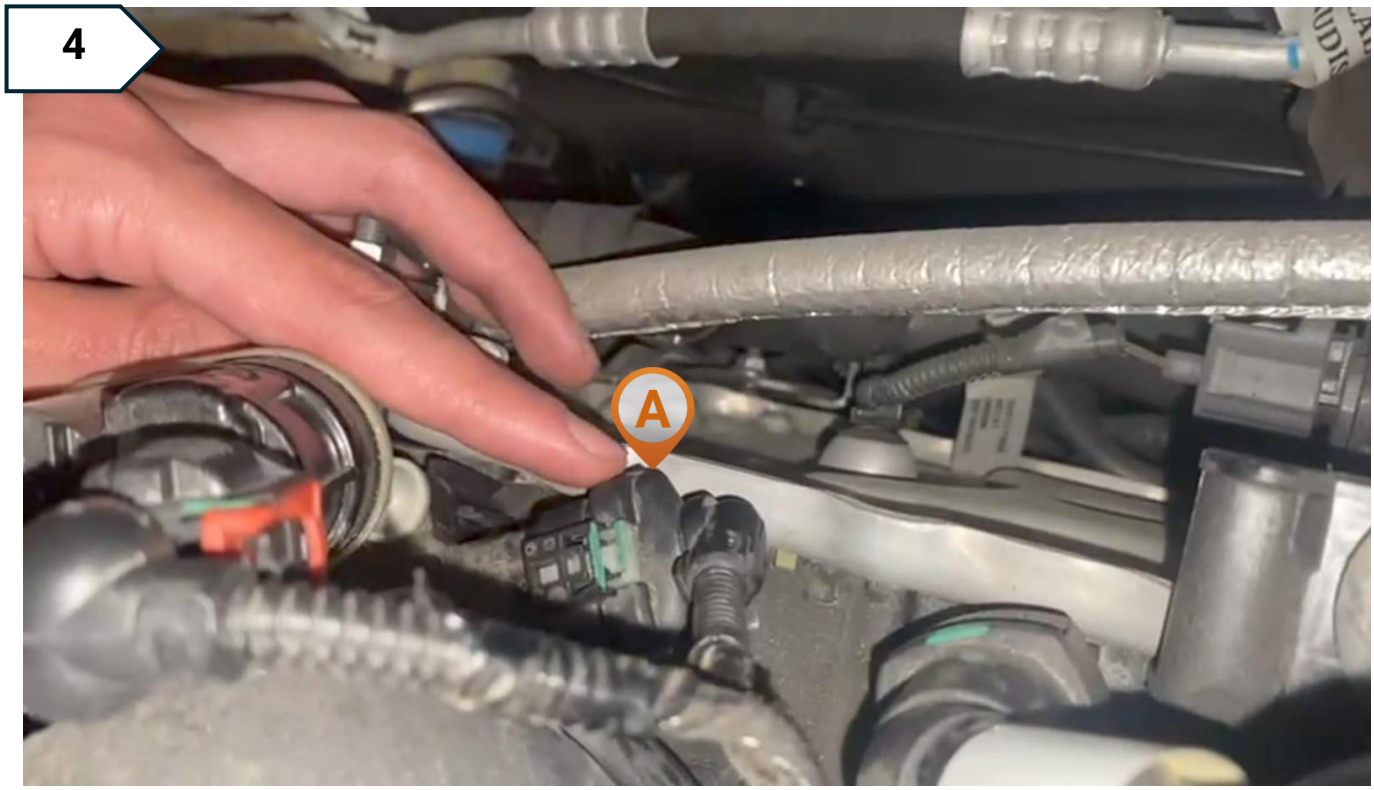

DE:
Saugrohrdrucksensor (A) lokalisieren

EN:
Locate Manifold Pressure Sensor (A)

IT:
Individuare il sensore di pressione del collettore (A)

FR:
Localiser le capteur de pression du collecteur d'admission (A)

3 Installation



DE:
(B) Turbodrucksensor am Ladeluftrohr lokalisieren.

EN:
Locate (B) Turbo pressure sensor on the charged pipe.

IT:
Individuare (B) il sensore di pressione del turbo sul tubo di carico.

FR:
Localiser (B) le capteur de pression de turbo sur la durite de suralimentation.

3 Installation



DE:
Variante mit längs eingebautem Motor

EN:
Longitudinally mounted engine variant

IT:
Variante con motore montato longitudinalmente

FR:
Variante moteur monté longitudinalement

3 Installation

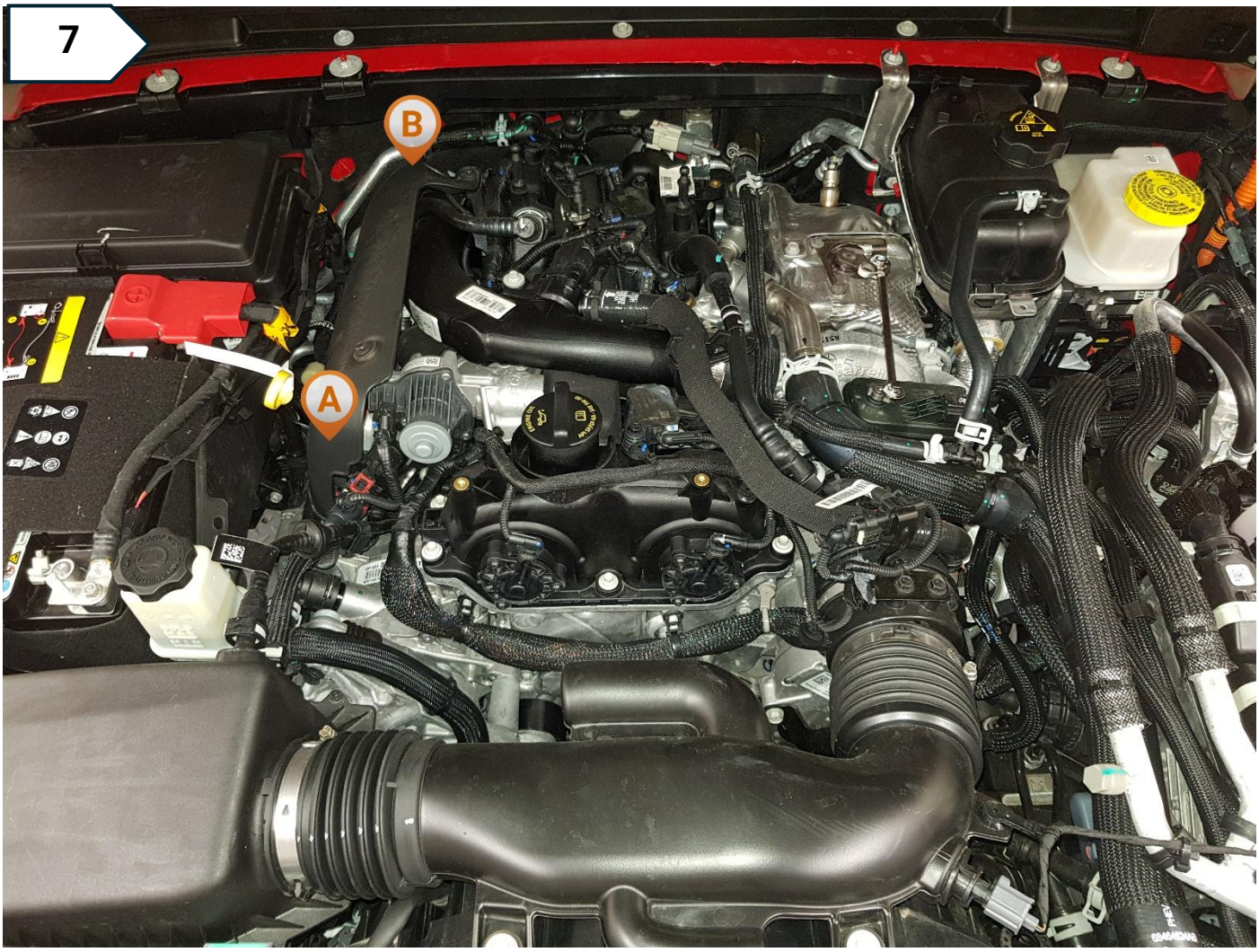

DE:
Ungefähre Positionen der Sensoren A, B.

EN:
Approximate locations of sensors A, B.

IT:
Posizioni approssimative dei sensori A, B.

FR:
Emplacements approximatifs des capteurs A, B.

3 Installation

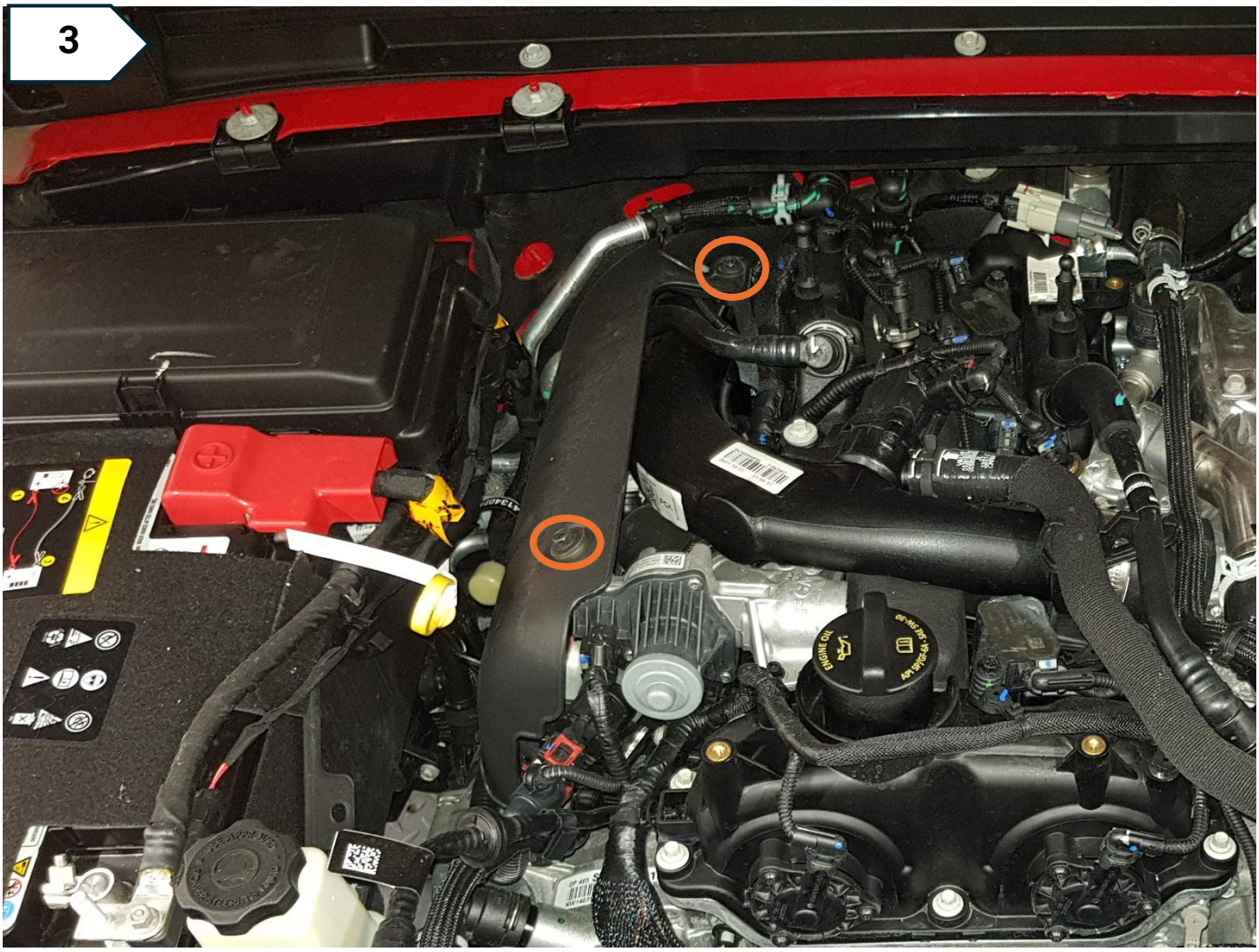

DE:
Entfernen Sie die zwei 10-mm-Schrauben, um die Schalldämmverkleidung zu lösen und Zugang zum Saugrohrdrucksensor (A) zu erhalten.

EN:
Remove 2x 10mm bolt to loosen sound insulation trim, to access sensor A - Manifold Pressure Sensor.

IT:
Rimuovere i 2 bulloni da 10 mm per allentare il rivestimento insonorizzante e accedere al sensore di pressione del collettore (A).

FR:
Retirez les 2 boulons de 10 mm pour desserrer la garniture d'isolation acoustique afin d'accéder au capteur de pression du collecteur (A).

3 Installation

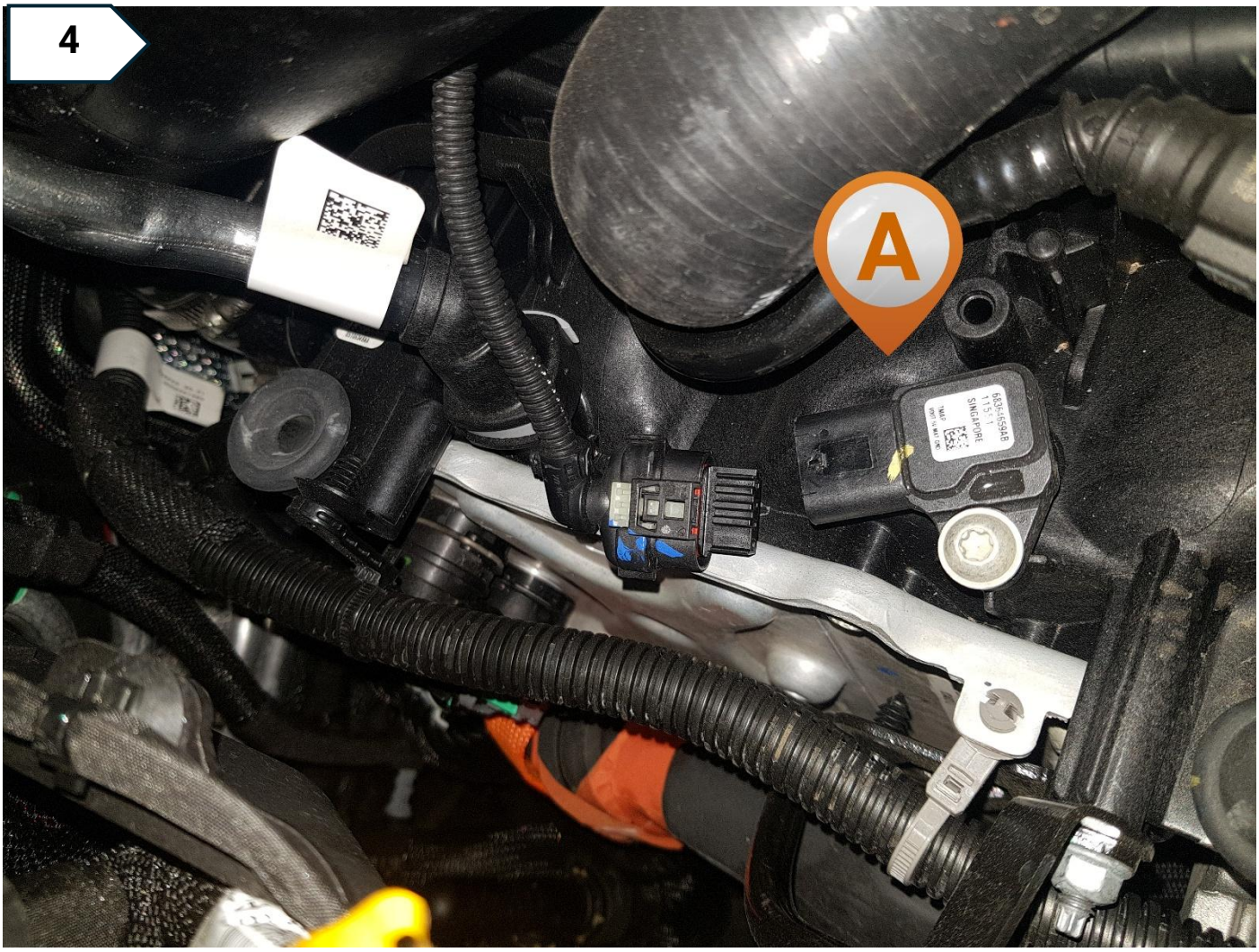

DE:
Saugrohrdrucksensor (A) lokalisieren

EN:
Locate Manifold Pressure Sensor (A)

IT:
Individuare il sensore di pressione del collettore (A)

FR:
Localiser le capteur de pression du collecteur d'admission (A)

3 Installation

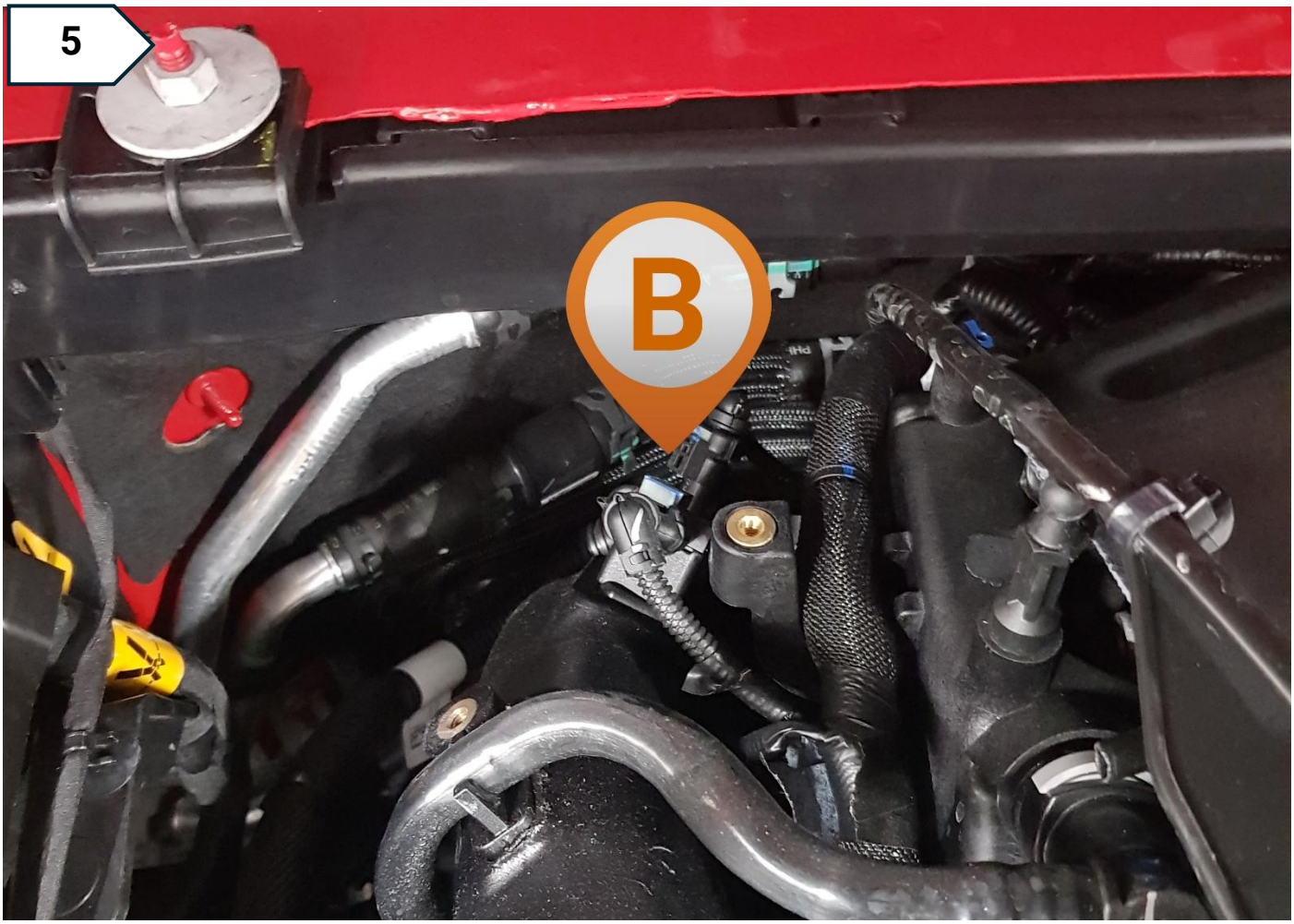

DE:
(B) Turbodrucksensor am Ladeluftrohr lokalisieren.

EN:
Locate (B) Turbo pressure sensor on the charged pipe.

IT:
Individuare (B) il sensore di pressione del turbo sul tubo di carico.

FR:
Localiser (B) le capteur de pression de turbo sur la durite de suralimentation.

3 Installation DE/EN

7/8 – *DE: RaceChip und Kabelbaum befestigen* (Beispielabbildung)
– *EN: Attach RaceChip and wiring harness* (Example illustration)

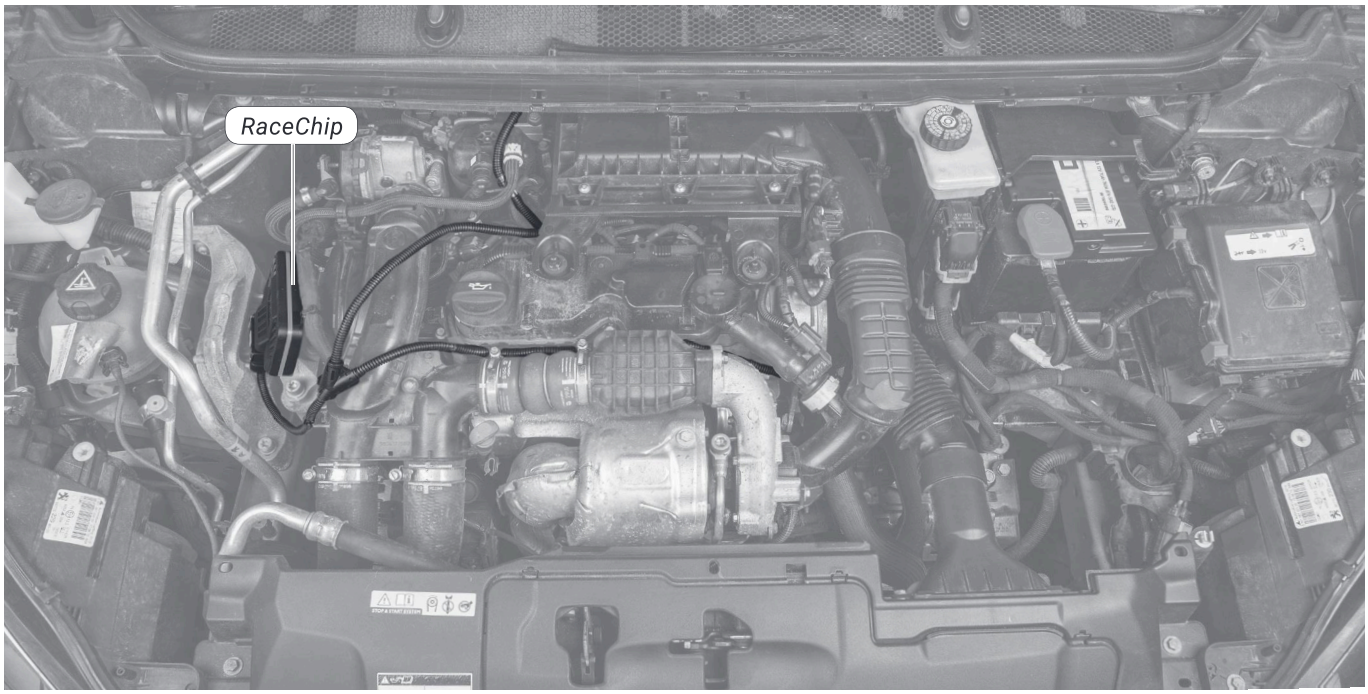

- **DE:** Achten Sie bei der Suche nach einem sicheren Montagepunkt für den RaceChip darauf, dass der Kabelbaum ebenfalls gut im Motorraum verlegt und gesichert werden kann, ohne übermäßige Spannung.
- **EN:** When looking for a secure mounting point for the RaceChip, ensure that the wiring harness can also be routed and secured well in the engine compartment without excessive tension.

GTS BLACK

GTS

RS

- **DE:** Befestigen Sie den RaceChip mit Hilfe der beigelegten 360° Befestigungsclips und der Kabelbinder, indem Sie diese durch die Befestigungsclips ziehen.
- **DE:** Sollten Sie den RaceChip später einmal temporär ausbauen wollen, so müssen Sie nur die Befestigungsclips lösen und keinen Kabelbinder durchtrennen.
- **EN:** Secure the RaceChip using the included 360° mounting clips and cable ties by threading them through the mounting clips.
- **EN:** If you wish to temporarily remove the RaceChip later on, you only need to loosen the fastening clips and do not have to cut any cable ties.

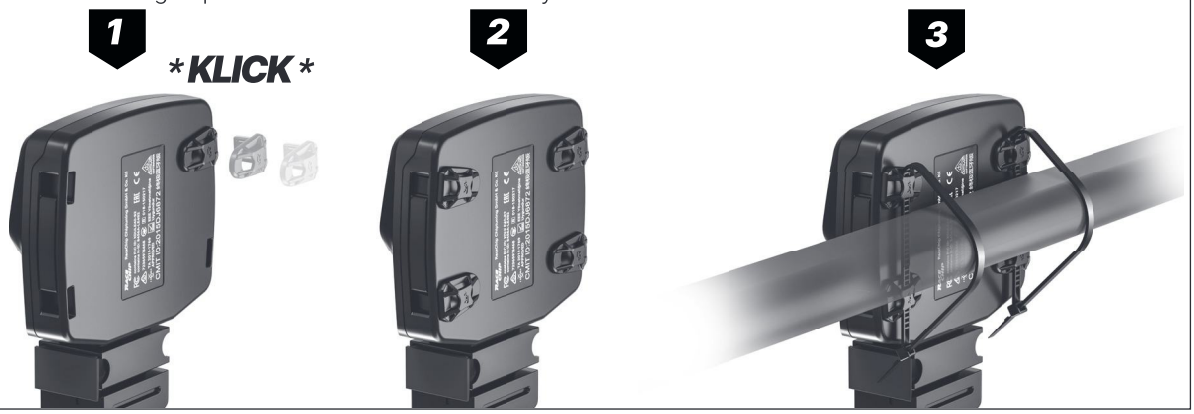

S

- **DE:** Befestigen Sie den RaceChip mit Hilfe der beigelegten Kabelbinder, indem Sie diese durch die Befestigungsösen ziehen.
- **EN:** Secure the RaceChip using the included cable ties by threading them through the mounting loops.

3 Installation IT/FR

7/8 – ***IT: Fissare il RaceChip e il cablaggio*** (Esempio di illustrazione)

– ***FR: Fixez le RaceChip et le faisceau de câblage*** (Exemple d'image)

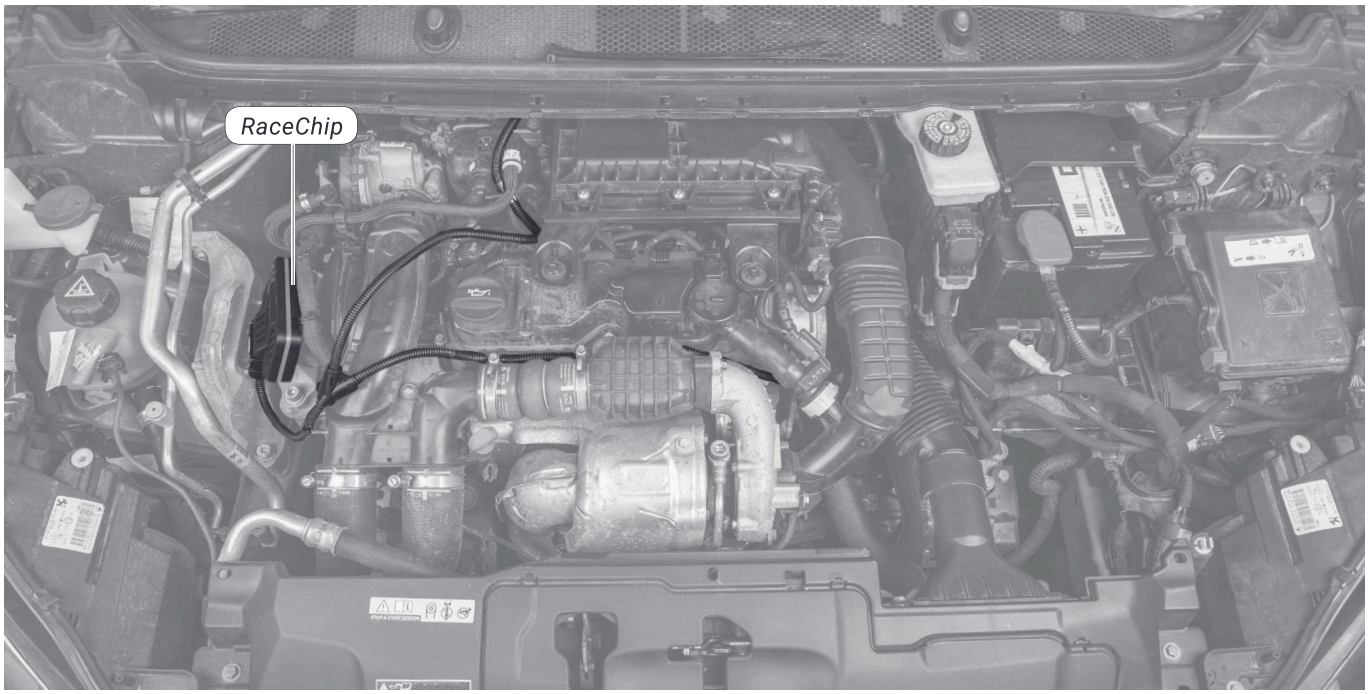

- **IT:** Quando cerchi un punto di montaggio sicuro per il RaceChip, assicurati che il cablaggio possa essere posizionato e fissato bene nel vano motore, senza eccessiva tensione.
- **FR:** Lors de la recherche d'un point de montage sécurisé pour le RaceChip, assurez-vous que le faisceau de câbles peut également être acheminé et sécurisé correctement dans le compartiment moteur sans tension excessive.

GTS BLACK

- **IT:** Fissare il RaceChip utilizzando le clip di fissaggio a 360° fornite e il fascetta, passando queste ultime attraverso le clip di fissaggio.
- **IT:** Se desidera rimuovere temporaneamente il RaceChip in un secondo momento, deve semplicemente allentare le clip di fissaggio senza dover tagliare alcun fascetto.
- **FR:** Fixez le RaceChip à l'aide des clips de montage 360° inclus et des attaches de câble en les passant à travers les clips de montage.
- **FR:** Si vous souhaitez retirer temporairement le RaceChip plus tard, il vous suffit de desserrer les clips de fixation et vous n'avez pas besoin de couper les attaches de câble.

GTS

RS



S

- **IT:** Fissare il RaceChip utilizzando i fascette in dotazione, passando queste attraverso i fori di fissaggio.
- **FR:** Fixez le RaceChip à l'aide des attaches de câble fournies en les passant à travers les boucles de montage.

3 Installation DE/EN

- **DE:** Führen Sie das Kabel an einer geeigneten Stelle (etwa einem schon vorhandenen Kabelstrang) entlang und befestigen Sie es mit den beigelegten Kabelbindern.
- **EN:** Run the cable along a suitable location (such as an existing cable harness) and secure it with the cable ties provided.

DE

- Achten Sie bei der Auswahl des Befestigungspunktes auch darauf, dass der RaceChip vor Wasser, übermäßiger Hitze und Vibrationen geschützt ist.
- Verpacken Sie den RaceChip nicht in einer luftdichten Tüte, dadurch kann Schwitz oder Kondenswasser entstehen.
- Führen Sie das Kabel nicht an Stellen im Fahrzeug entlang, die sich beim Betrieb übermäßig erhitzen können (z.B.: Abgassystem, Turbolader, etc.).
- Führen Sie das Kabel nicht an beweglichen Teilen entlang.
- Vermeiden Sie unbedingt die Befestigung des Kabels an Schläuchen (z.B.: Bremsschlauch), um ein eventuelles Aufscheuern zu vermeiden.
- **Bitte bringen Sie alle zuvor entfernen Bauteile wieder in umgekehrter Reihenfolge an.**

EN

- When selecting the mounting point, also ensure that the RaceChip is protected from water, excessive heat and vibrations.
- Do not pack the RaceChip in an airtight bag, as this can cause condensation or moisture to form.
- Do not route the cable along areas of the vehicle that may become excessively hot during operation (e.g. exhaust system, turbocharger, etc.).
- Do not run the cable along moving parts.
- Be sure to avoid attaching the cable to hoses (e.g. brake hose) in order to prevent possible chafing.
- **Please reinstall all previously removed components in reverse order.**

DE: Abschluss der Installation im Motor

EN: Completion of the installation in the engine

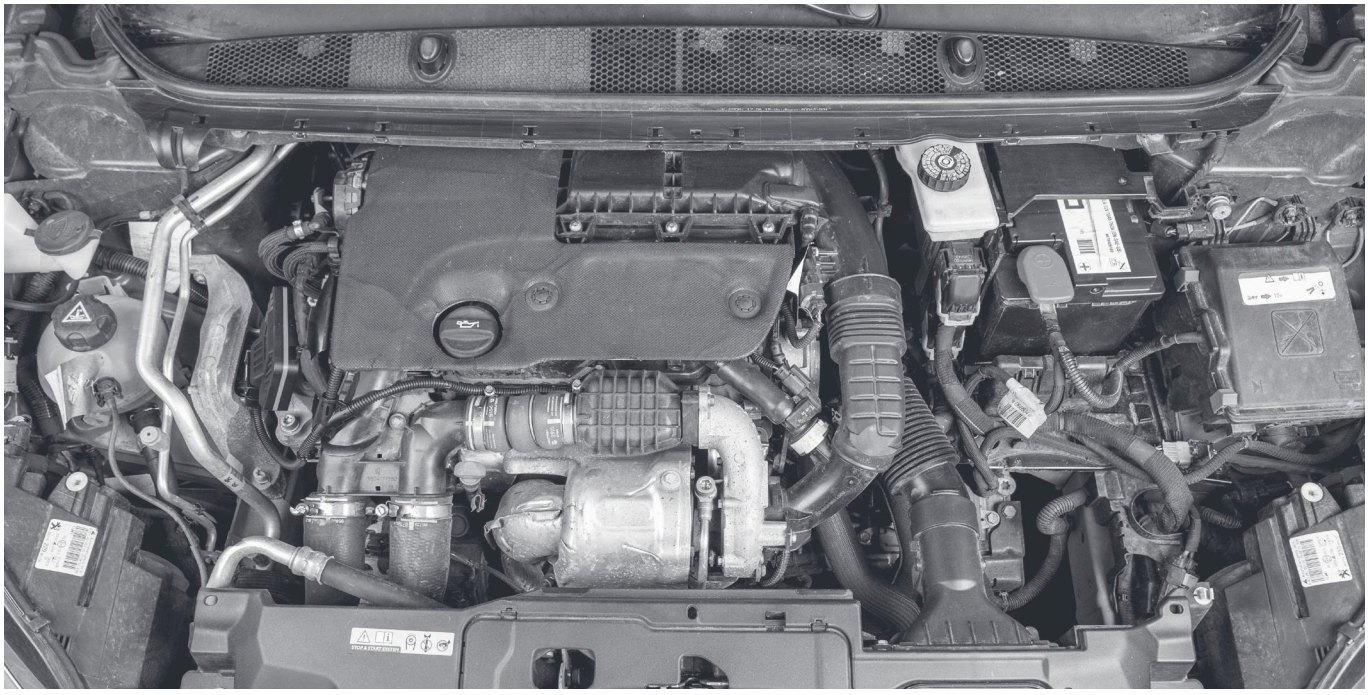

- **DE:** Bitte bringen Sie die zuvor entfernte Motorabdeckung wieder auf Ihrem Motor an und schließen Sie die Motorhaube.
- **EN:** Please reattach the previously removed engine cover to your engine and close the bonnet.
- **DE:** Der Einbau am Motor ist jetzt abgeschlossen und Ihr RaceChip betriebsbereit (mit **App-Steuerung**: in der Leistungsstufe **Sport)**.
- **EN:** The installation on the engine is now complete and your RaceChip is ready to use (with **app control**: in **Sport** power level).

3 Installation IT/FR

- **IT:** Fai passare il cavo in un punto appropriato (ad esempio, lungo un cablaggio esistente) e fissalo con i fascette per cavi in dotazione.
- **FR :** Faites passer le câble le long d'un emplacement approprié (comme un faisceau de câbles existant) et fixez-le avec les attaches de câble fournies.

⚠

IT

- Fai attenzione nella scelta del punto di fissaggio affinché il RaceChip sia protetto da acqua, eccessivo calore e vibrazioni.
- Non imballare il RaceChip in un sacchetto ermetico, poiché ciò può causare umidità o condensa.
- Non far passare il cavo attraverso aree dell'auto che potrebbero surriscaldarsi eccessivamente durante il funzionamento (ad es.: sistema di scarico, turbocompressore, ecc.).
- Non far passare il cavo lungo parti in movimento.
- Assicurati di non collegare il cavo ai tubi (ad es.: tubo dei freni) per evitare possibili abrasioni.
- **Si prega di rimontare tutti i componenti precedentemente rimossi in ordine inverso.**

FR

- Lors du choix du point de montage, assurez-vous également que le RaceChip est protégé de l'eau, de la chaleur excessive et des vibrations.
- Ne rangez pas le RaceChip dans un sac hermétique, car cela peut provoquer la condensation ou l'humidité.
- Ne faites pas passer le câble dans des zones du véhicule qui pourraient devenir excessivement chaudes pendant le fonctionnement (par exemple, le système d'échappement, le turbocompresseur, etc.).
- Ne faites pas passer le câble le long des pièces mobiles.
- Assurez-vous d'éviter de fixer le câble aux tuyaux (par exemple, le tuyau de frein) afin de prévenir tout frottement possible.
- **Veuillez réinstaller tous les composants précédemment retirés dans l'ordre inverse.**

IT: Completamento dell'installazione nel motore

FR : Achèvement de l'installation dans le moteur

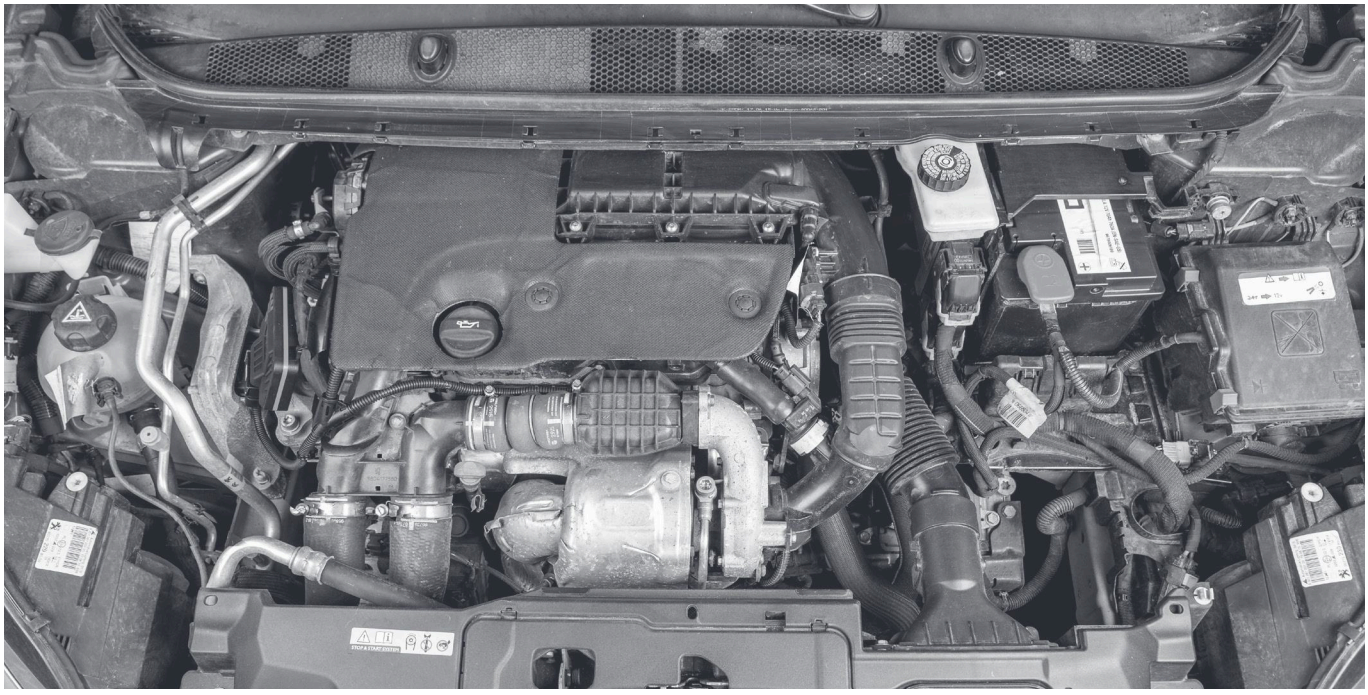

- **IT:** Si prega di riposizionare il coperchio del motore rimosso in precedenza e chiudere il cofano.
- **FR:** Veuillez rattacher le couvercle du moteur précédemment retiré à votre moteur et fermer le capot.
- **IT:** L'installazione sul motore è ora completata e il tuo RaceChip è pronto per l'uso (con controllo tramite **app**: nella modalità di prestazione **Sport**).
- **FR:** L'installation sur le moteur est maintenant terminée et votre RaceChip est prêt à être utilisé (avec contrôle par **application** : au niveau de puissance **Sport**).

4 Fine tuning

The RaceChip has been calibrated specifically for the engine in your car, and further adjustment is generally not necessary in order to get the best performance. However, performance tolerances or the condition of the engine sometimes mean that Fine tuning is needed after installing the RaceChip.

The rotary control (see ***Overview of the RaceChip***) allows you to fine tune the RaceChip quickly and easily, letting you get the best from your RaceChip-enhanced engine.

Fine tuning may be necessary if the following occurs:

A ***Engine idles more roughly than in stock tune.***

i	Engine runs roughly, knocks or “pinks” under load, or the engine warning light comes on.

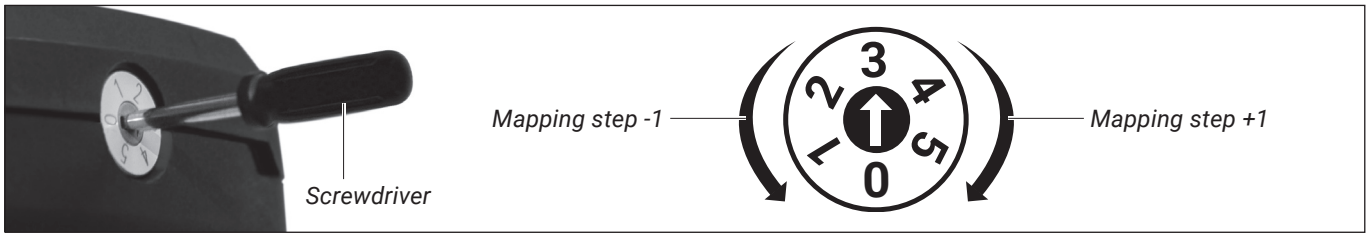

⚠	**Use the rotary control to change mappings only with the ignition switched on but without the engine running.**

- Mapping **3** is the factory setting.
- First activate Mapping **1**.
- Take your car for a test drive. If the engine performs as smoothly as you want, i.e. no hesitation or knocking, please activate Mapping **2** and go for another test drive.
- If the engine still performs as smoothly as you want, repeat the previous step.

i	If your engine does not run smoothly with any of the mappings or if the engine control light is permanently on after making all the adjustments (and after switching the ignition off and waiting 15 minutes), please contact our Customer Service (see ***Contact*** for details).

4 Fine tuning

B *Making the enhanced performance more noticeable*

i If the driver does not experience the extra performance, it means the driver cannot feel the difference from stock tuning.

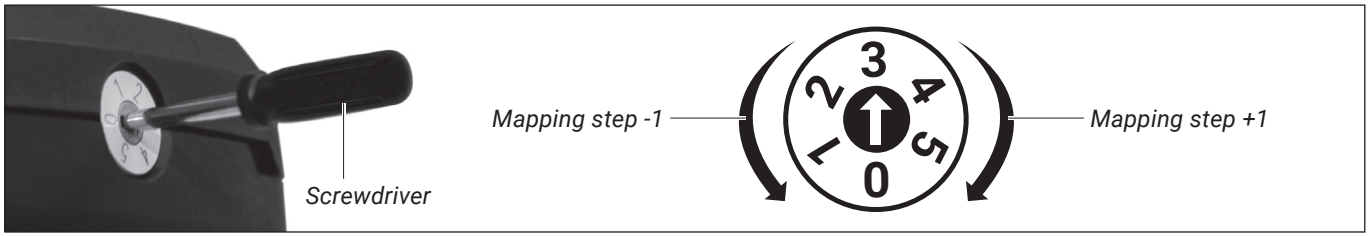

⚠ **Use the rotary control to change mappings only with the ignition switched on but without the engine running.**

- Mapping **3** is the factory setting.
- First activate Mapping **4**.
- Take your car for a test drive. Activate Mapping **5** only if you do not experience the enhanced performance strongly enough.
- If the engine does not perform as smoothly as you want, activate the next mapping down the scale (e.g. from **5** to **4**).

i
- **Mapping 0** puts the engine into stock tune with the RaceChip installed.
- You can also use the **deactivation plug** to return you car to stock tune without having to remove the wiring harness. In order to use the deactivation plug, you need to remove the RaceChip from the wiring harness connector and replace it with the deactivation plug.
- Before replacing the RaceChip with the deactivation plug, first ensure that there is no residual charge in the car's electrics (see ***Step 1***).

5 Trouble Shooting

If the RaceChip does not function as it should, you can find some initial assistance here. If the suggestions here do not solve the problem, please contact our Customer Service (see ***Contact***).

Description of problem	What to do
No extra performance or performance not noticeable enough I am not satisfied with the performance level of my vehicle.	• You can find detailed instructions on how to make the extra performance more noticeable in ***Fine tuning*** (section B).
Knocking/ rattling The engine knocks or rattles (diesel engine) more under load. It runs less smoothly than in stock tune.	• If you have the impression that your engine knocks or rattles more than in stock tune, please take the car for a few test drives to be sure that your first impression was right. On the test drive, pay special attention to the engine's behaviour under load – the RaceChip only works then. • If your first impression was right, you can find detailed instructions on how to make the engine run smoothly again in ***Fine tuning*** (section A). • If the knocking/rattling is very noticeable, you can carry out the steps described in ***Fine tuning*** immediately.
Jolting With the RaceChip installed, my car jolts, stutters or hesitates in situations where it did not before.	• You can find detailed instructions on how to make the engine run smoothly again in ***Fine tuning*** (section A). • If that does not cure the problem, please contact our Customer Service; if you can describe the circumstances when the problem occurs, our Customer Service can make further adjustments.
Quality of gear shift reduced The shift behaviour and/or the shift quality has worsened since the installation of the RaceChip. The gearbox sometimes cannot seem to find the right gear.	• Select the next lowest mapping (see ***Fine tuning***, section A). Repeat this procedure until you are happy with the gear shifting. • If that does not cure the problem, please contact our Customer Service; if you can describe the circumstances when the problem occurs, our Customer Service can make further adjustments.

5 Trouble Shooting

Description of problem	What to do
Engine fault light or other warning light comes on and stays on after installing the RaceChip. A warning light on the dashboard comes on and stays on after installation of the RaceChip. 	• If a warning light (e.g engine fault light) comes on, it does not automatically mean something is wrong with the engine. The lamp can simply be a measure programmed by the manufacturer to protect the engine; it can be triggered if a cable is disconnected from a sensor when there was still power in the system, for instance. (One indication is if the Power On control lamp (see ***Overview of the RaceChip***) lit up as soon as the wiring harness was connected; it should light up only when the ignition is switched on). Please follow the steps below carefully until you have found the cause of the warning lamp and fixed it. • De-install the RaceChip wiring harness to the point that you can reconnect all the connections in your car as they were before you started installing the RaceChip. Lock the car and wait ca. 30 minutes before starting the engine. If the warning light still stays on, stopping and restarting the engine several times or waiting for even longer can sometimes help. • If the warning lights have gone out, you can re-install the RaceChip. Make sure the ignition is off and wait at least 15 minutes before disconnecting the sensors. When the installation is complete, double check all the connections to ensure the connectors are joined correctly and tightly. Please connect the Deactivation plug to the wiring harness and start the engine again. • If the warning lights do not come on, switch off the engine again and wait for 15 minutes. You can now replace the Deactivation plug with the RaceChip and start the engine again. • If the warning lights come on again now, please contact our Customer Service (see ***Contact***).
Soot generation My car produces (more) soot since installing the RaceChip.	• You can find detailed instructions on how to make the engine run smoothly again in ***Fine tuning*** (section A). The steps will also help stop the engine producing excess soot.

5 Trouble Shooting

Description of problem	What to do
Engine fault light comes on after a while and stays on After driving with the RaceChip (including acceleration) for while, the engine fault light comes on and stays on.	• Please park your car and switch the engine off while leaving the ignition on. Activate **Mapping 1** (see ***Fine tuning***, section A) and then turn the ignition off. Lock the car and wait ca. 30 minutes before starting the engine again. If the warning light does not come on again, you can follow the steps described in ***Fine tuning*** (section A) to activate the right mapping. • If the fault light is still on, please activate **Mapping 0** or replace the RaceChip with the Deactivation plug (supplied). This returns your car to stock tuning. Lock the car and wait ca. 30 minutes before starting the engine again. Please contact our Customer Service (see ***Contact***) and tell them what you see (warning is on/not on).
The car does not start The car's ignition does not work after installing the RaceChip.	• Something probably went wrong during the installation procedure. Please follow the steps below to check that the RaceChip is installed correctly. • De-install the RaceChip wiring harness the point that you can reconnect all the connections in your car as they were before you started installing the RaceChip. (You can leave the wiring harness in the engine bay; the important thing is that it is not connected to the vehicle electrics). Lock the car and wait ca. 30 minutes before trying to start the engine again. • If the car starts, you can re-install the RaceChip. Make sure the ignition is switched off and wait at least 15 minutes before disconnecting the sensors in the engine bay. After installing the RaceChip, double check that all the connectors are correctly and firmly fixed. Go through all the steps described in Installation again. Finally, start the engine. • If the car still does not start, please contact our Customer Service (see ***Contact***).

5 Trouble Shooting

Description of problem	What to do
No noticeable fuel savings I do not notice any fuel savings	• Make sure you are comparing before-and-after fuel consumption based on the vehicle's actual consumption – on-board computers often display incorrect values. • It is important that your driving style remains the same, i.e. you do not accelerate harder or drive fast more often than before. You will not see any fuel savings either if you often drive at or near maximum load – you need to adopt an economical driving style at least some of the time in order to save fuel. • If your driving style matches the description but you still do not see any fuel savings, please select the next highest mapping (see ***Fine tuning***, section B). After selecting a new mapping, check the actual consumption to see if there has been any reduction.

6 Contact



Our Customer Service is ready to help!

Find out how to contact us at:
www.racechip.com/service-support

Please have your customer details close by when you contact us.

Follow us on:

/racechipchiptuning

@racechipchiptuning

Legal notice

RaceChip Chiptuning GmbH & Co. KG
Karl-Frasch-Str. 14
73037 Göppingen
Germany

Sales tax identification number: DE 260672432
Registered at District Court of Ulm: HRA 721734
Tax number: 63079/11153

Personally liable partner:
RaceChip Chiptuning Verwaltungs GmbH
Chief executives: Dirk Bongardt, Kai Döhler
Head office: Karl-Frasch-Str. 14, 73037 Göppingen, Germany
Registered at HRB District Court of Ulm: HRB 724254