PLEASE READ BEFORE STARTING INSTALLATION!

RACE CHIP



+ APP-CONTROL

Download the new RaceChip+ app

Download on the App Store

bit.ly/RCplus-iOS

GET IT ON Google Play

bit.ly/RCplus-android

GTS 5

User Manual

Renault Master II 3.0 dCi 120

Contents

1 Scope of delivery ..... *A*

2 Overview of the RaceChip ..... *B*

3 Installation ..... *C*

5 Trouble Shooting ..... *E*

6 Contact ..... *F*

Overview and explanation of symbols

⚠ **Warnings** and important information – **please read!**

i **General information** on installation and use

Tips to assist installation and use

1 Scope of delivery

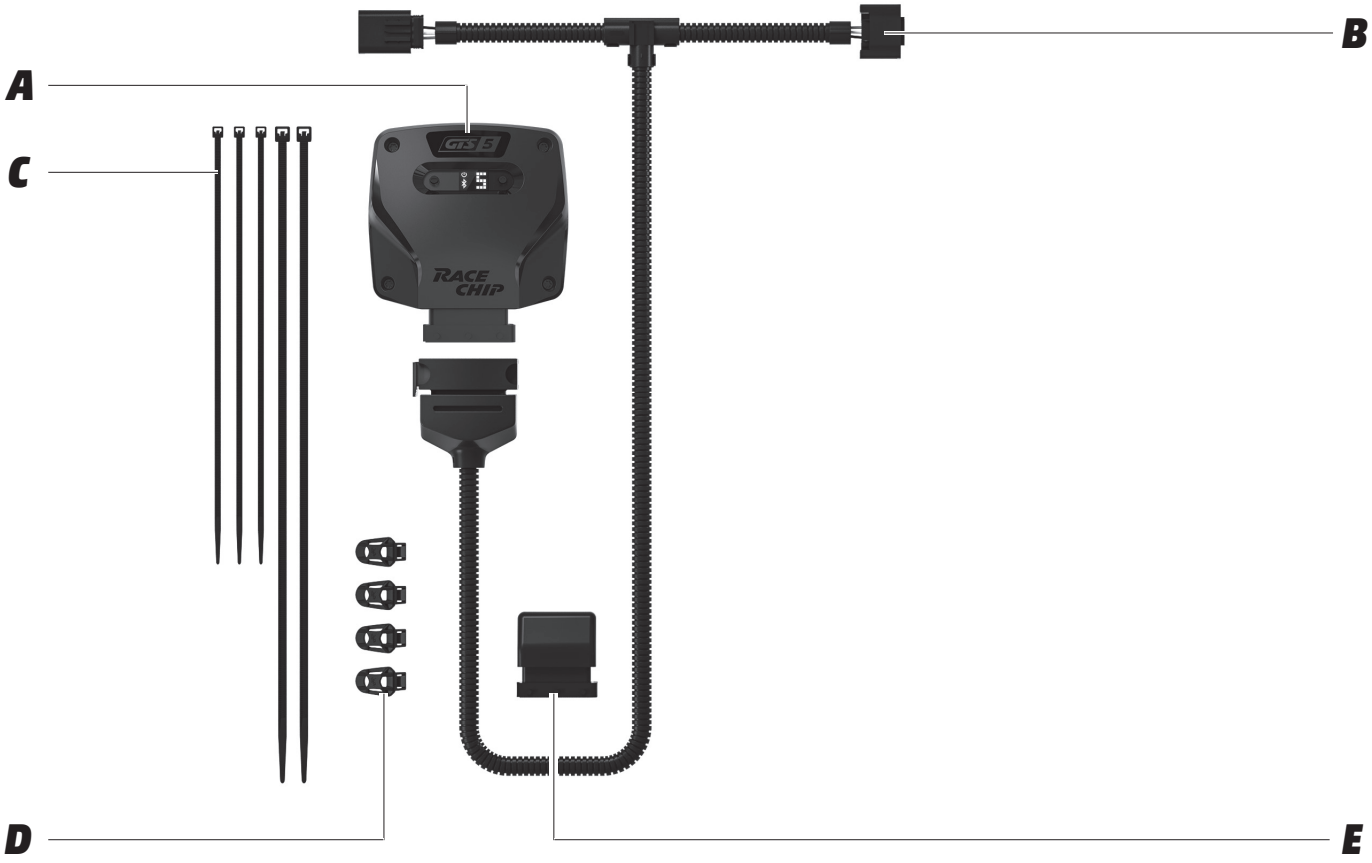

A ***RaceChip GTS 5***
calibrated specifically for your vehicle [1]

B ***Wiring harness***
automobile-grade, compatible with your vehicle [1]

C ***Cable ties***
2 x long cable ties
3 x short cable ties

D ***Fixing system Pro***
4 x 360° fixing clips

E ***Deactivation plug***
returns your engine to stock tune

[1] Picture may differ from delivered product.

2 Overview of the RaceChip

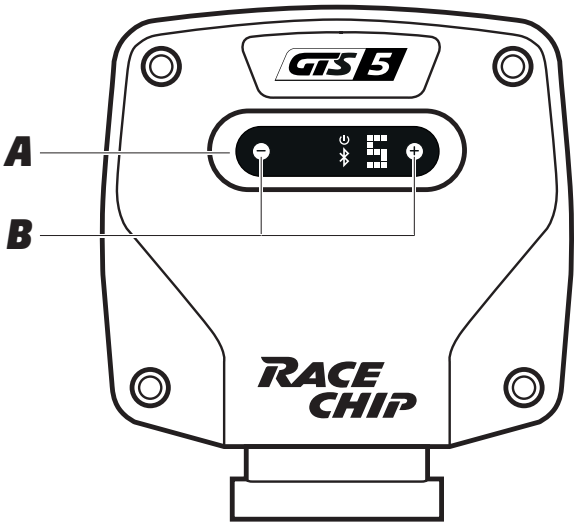

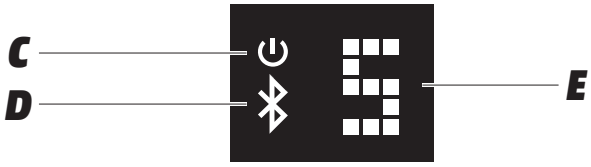

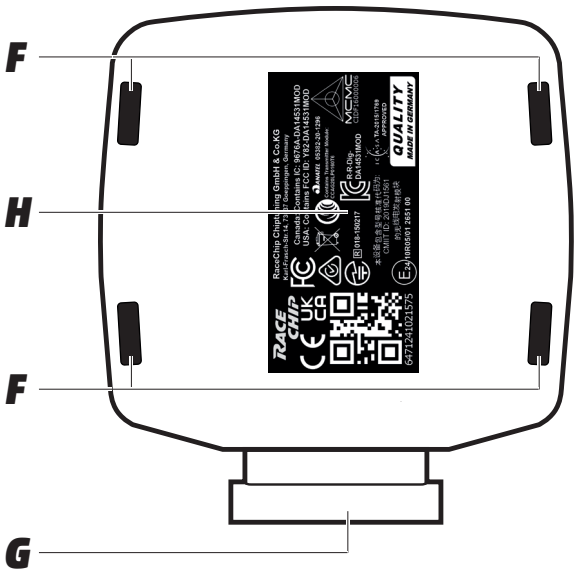

A Digital User Interface for controlling the RaceChip.

B +/- buttons for changing the tuning stages (see ***Operation***)

C Power ON light; lights only when the vehicle ignition is on and power is being supplied to the RaceChip.

D Bluetooth indicator: lights only when the vehicle ignition is on and the Bluetooth connection is active.

E Display showing tuning stage selected (see ***Operation***).

F Slot for 360° fixing clips.

G FCI plug for connecting to the vehicle's wiring.

H Product label contains:
- QR code
- serial number

3 Installation

Step 1 of 7 - Preparation

⚠ **Before installing the RaceChip, please wait for your engine to cool down. Otherwise there is a risk of sustaining burns.**

1 Open your vehicle's bonnet, and close and lock the doors.

2 **Wait about 10 minutes** before starting ***Step 2***, as all current consumers must have switched themselves off.

Generally speaking, you do not require special tools to perform the installation. If you need a tool, we will tell you when you get to the relevant step in these instructions. You will probably find wire cutters useful for clipping off the loose ends of cable ties.

i

- For cars with "**Keyless Go**": after locking the car, place the key out of signal range (about 10 m from the car).
- If an **alarm system** is fitted: disable the alarm before starting installation.
- Some cars **will not lock completely** if the bonnet is open and electrical consumers are still active. If this is the case with your car, push the bonnet catch over manually, lock the car again and wait ca. 15 minutes. When you have finished the installation, do not forget to release the catch again by pulling the bonnet release lever.
- If you have any questions or difficulties during the installation, please refer to ***Trouble Shooting*** for hints and tips.
- Our Customer Service is of course always ready to help. See ***Contact*** for details.

3 Installation

Step 2 of 7 - Removing the engine cover

i	The pictures on the following pages are for demonstration purposes only – details may be in your car's engine bay. However, the installation process is identical.

The engine cover is held in place by clips (**A**) or screws (**B**).

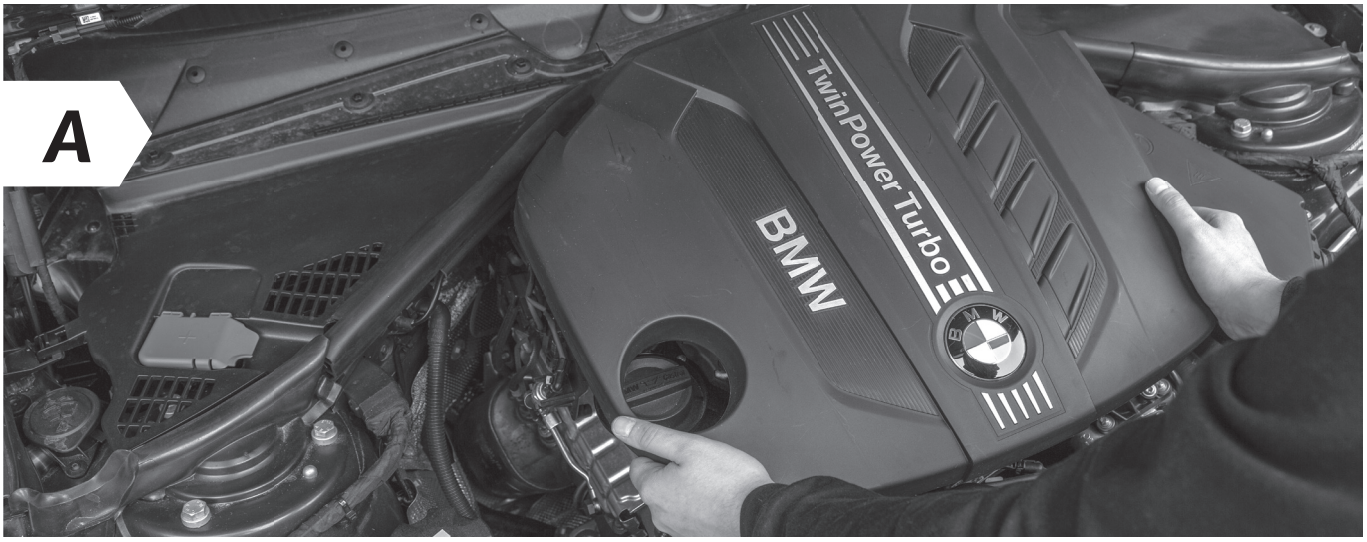

- Remove the engine cover and place it next to the car. You may have to jiggle the cover slightly to release it from the holding clips.

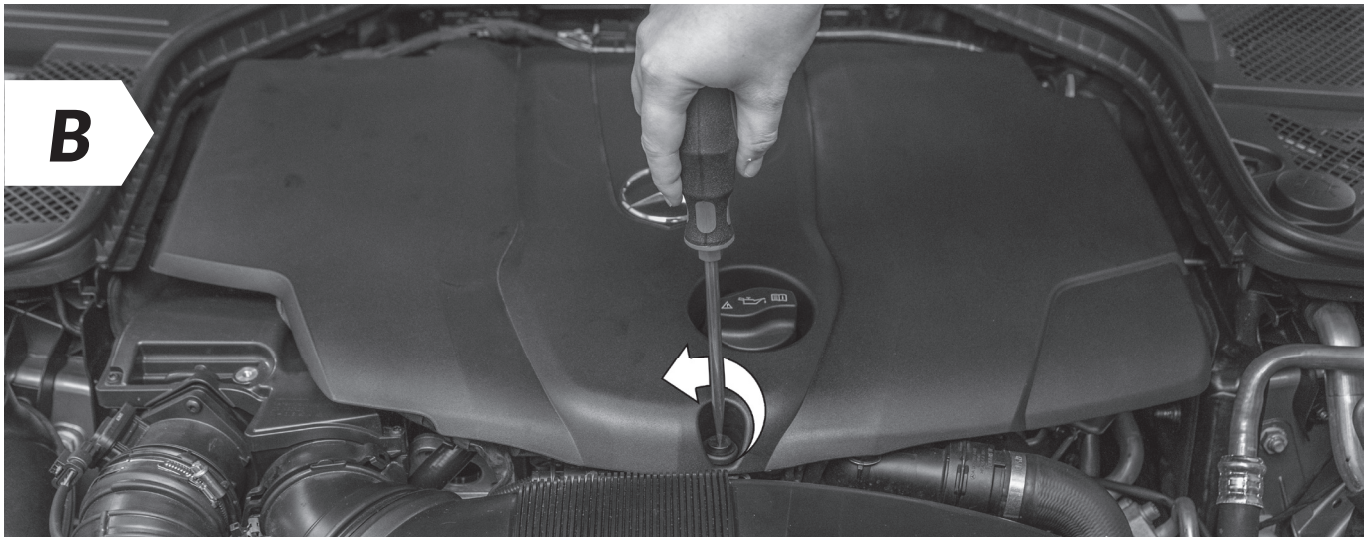

- In some vehicles it is necessary to loosen one or more screws before you can remove the engine cover.
- If there is no cover on your engine, you can proceed directly to ***step 3***.

3 Installation

Step 3 of 7 – Connection to common rail sensor

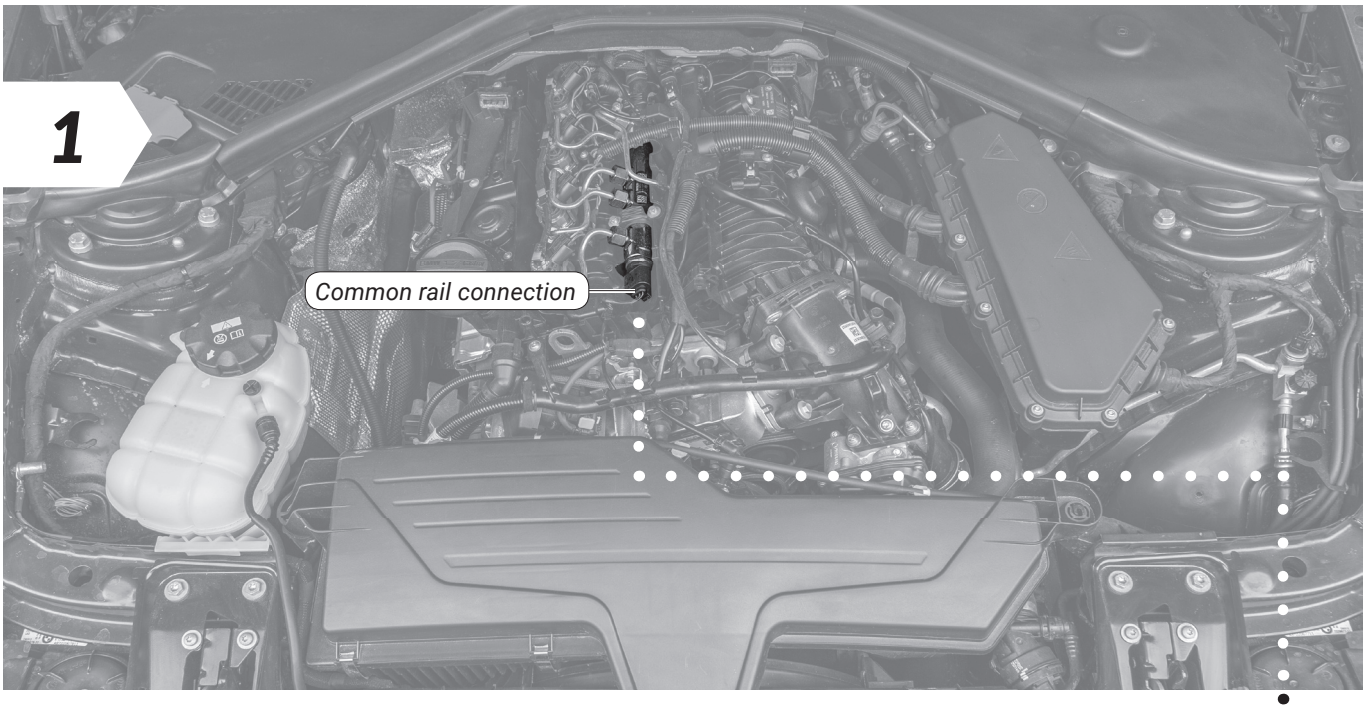

- First locate the common rail sensor connection in your engine bay.
- The common rail sensor connection is located either at one of the ends of or centrally on the common rail and can be clearly identified by the large union nut.
- The best way to find the common rail itself is by following the injection lines. These always lead directly from the injection system to the cylinders, i.e. they can be traced back from the engine block.

Setup illustration

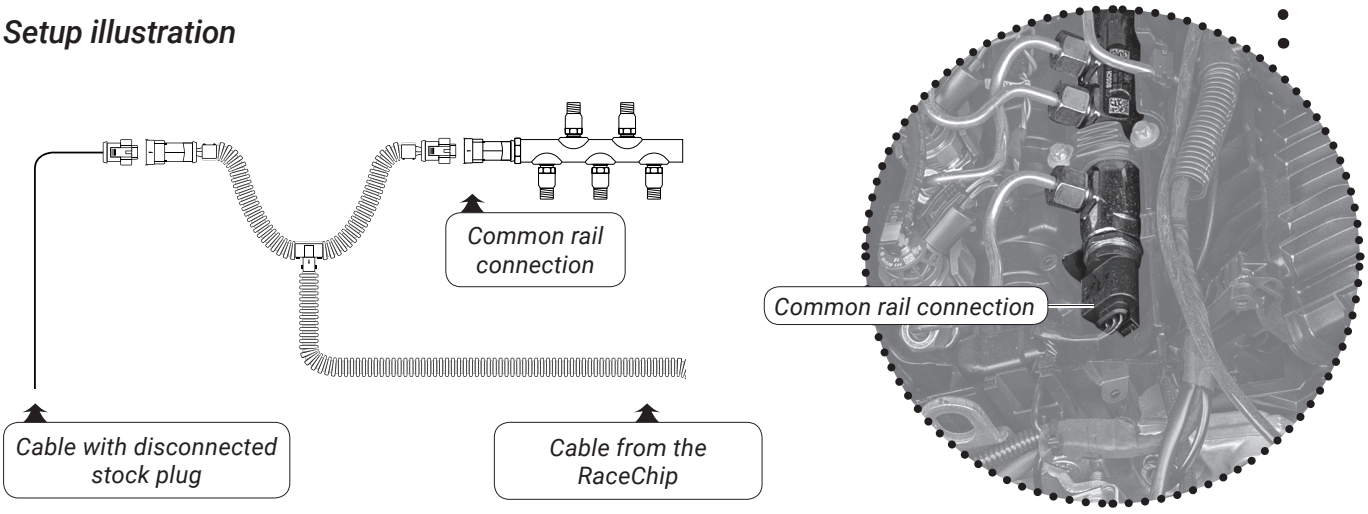

3 Installation

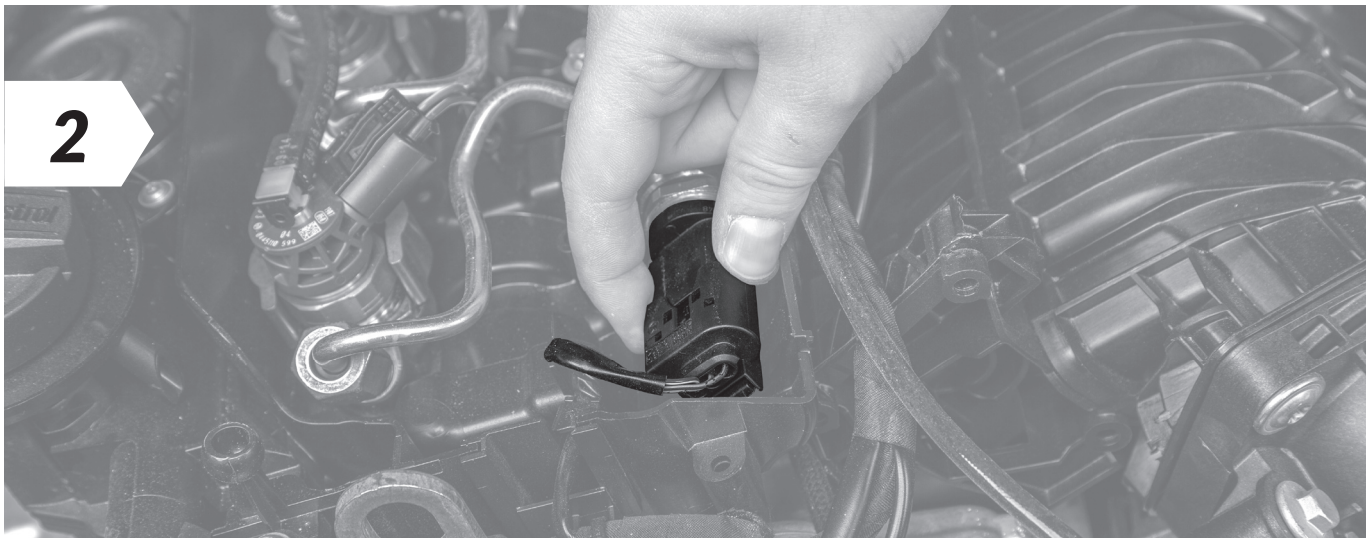

- Disconnect the plug from the common rail sensor.

If you experience difficulties disconnecting the common rail sensor, see ***Detaching the Connector Correctly*** (separate document) for assistance.



- Now connect the end of the RaceChip wiring harness to the disconnected connector and the other end to the sensor.

- **Make sure that the plug's locking clip engages again. You should hear a sharp CLICK.**

3 Installation

Step 4 of 7 – Connecting the RaceChip and first function test

1 **Disconnect the deactivation plug from the wiring harness**

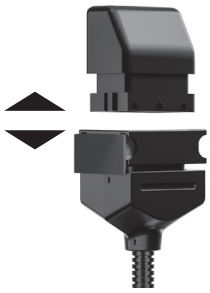

2 **Connect the RaceChip**



i

- If the Digital User Interface lit up as soon as it was connected, this means that there was still power in the system during the installation.
- In some cases, this can lead to an error message during the first function test. Please refer to ***Trouble Shooting*** for a solution.

3 **Carrying out function test**

- Position the RaceChip and the wiring harness safely in the engine bay. Do not fix anything in place yet.
- Switch the ignition on. **DO NOT** start the engine.
- Check for the following:
  - Control lights on the dashboard light up and go out as normal.
  - The Power ON ⏻ and Bluetooth ᛒ indicators light up on the Digital User Interface of your RaceChip (see ***Overview of the RaceChip***).
- If all the above happens, you can start the engine. It should start as normal and should react to the throttle when idling.
- Switch off the engine and ignition.

i

- If your car will not start as normal, please refer to ***Trouble Shooting*** for hints and tips.
- Our Customer Service is of course always ready to help. See ***Contact*** for details.

3 Installation

Step 5 of 7 – Fixing RaceChip and wiring harness

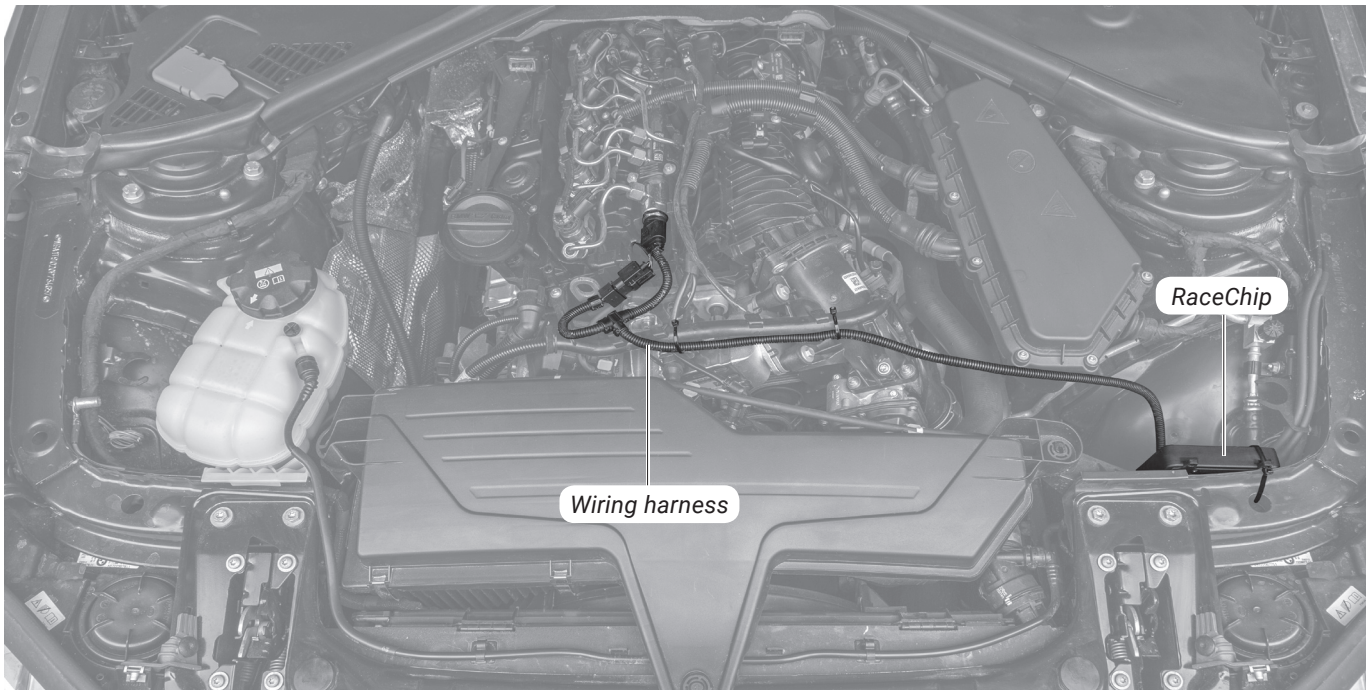

- Before fixing the RaceChip in place in the engine bay, ensure that the wiring harness can also be routed and fixed securely without putting it under excessive tension.
- Use the 360° fixing clips included to fix the RaceChip and thread the cable ties through the fixing clips to hold the wiring harness in place.

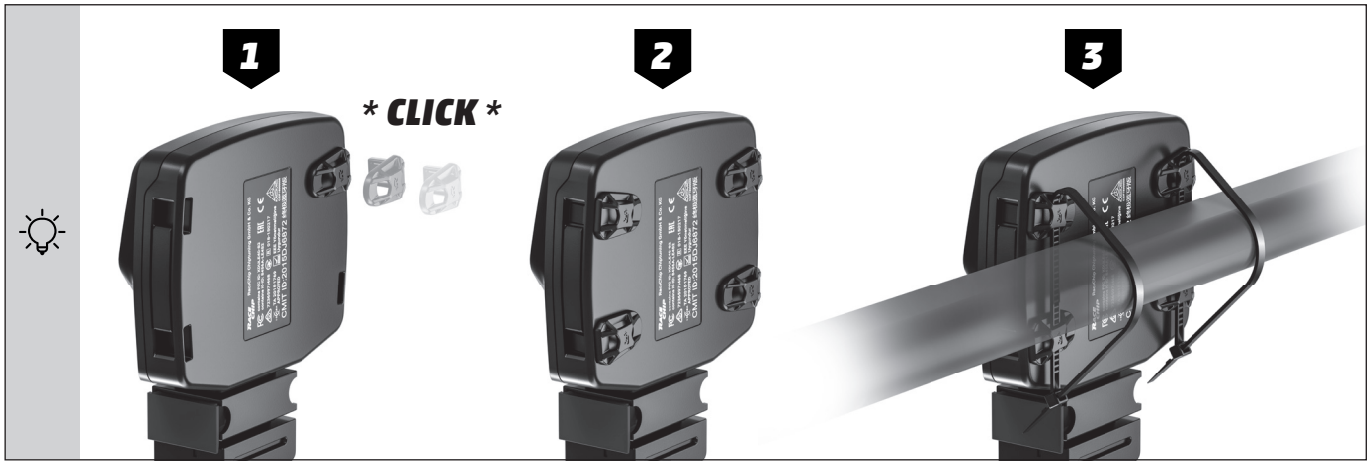

- If you need to remove the RaceChip at a later date, you can simply release the clips and do not have to cut any cable ties.

3 Installation

- Route the cable along a suitable path (for example, along existing wiring harness) and then fasten it using the supplied cable tie.

⚠

- When selecting a fastening point, make sure that the RaceChip is protected from exposure to water, heat, and vibrations.
- Do not wrap the RaceChip in an airtight bag as this can lead to a built up of condensation.
- Do not route the cable in areas in your vehicle that become overly hot during operation (e.g. the exhaust system, turbocharger, etc.).
- Do not route the cable along movable parts.
- Never fasten the cable onto hoses (e.g. a brake hose) as this could result in abrasion.

Step 6 of 7 - Finishing the installation in the engine bay

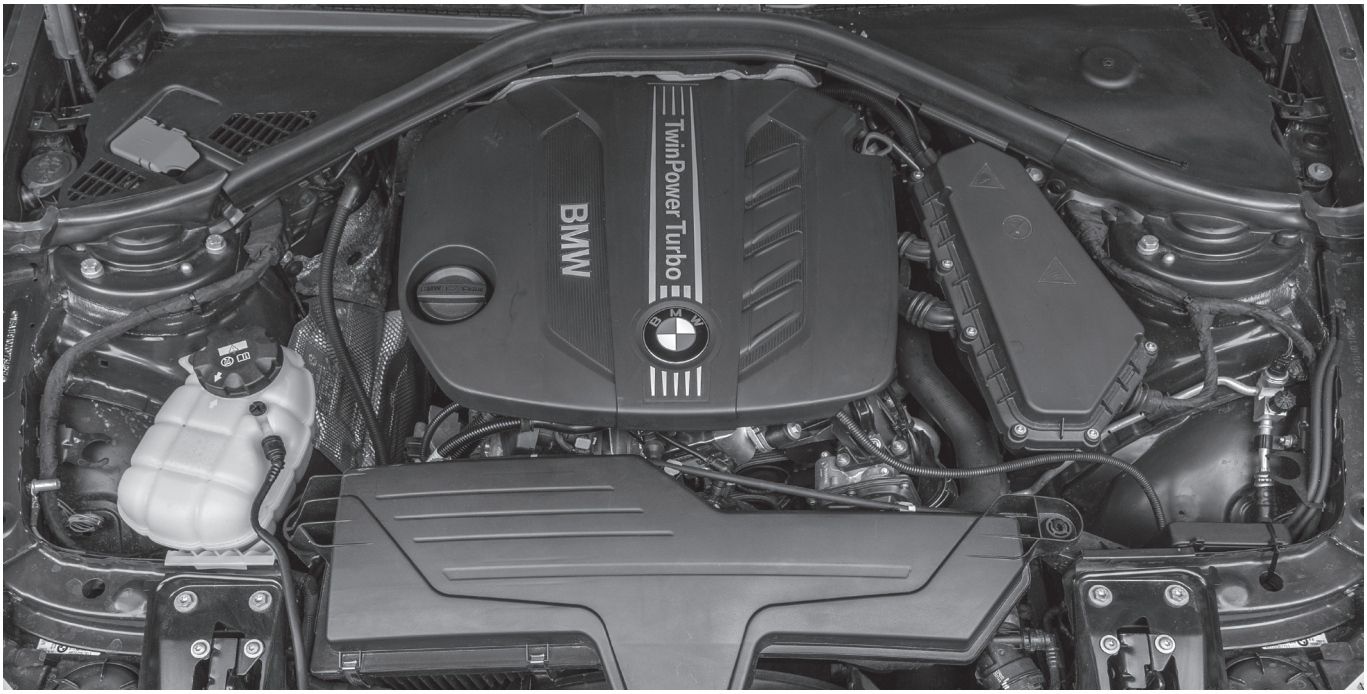

- Re-attach the cover of your engine and close the bonnet.
- The basic installation is now complete and the RaceChip can be used in the **SPORT** tuning stage.
- Take your car for a test drive. If you have any questions, do not hesitate to contact our Customer Service department (see ***Contact*** for details).

3 Installation

Last step – Pair RaceChip with your smartphone

According to your operating system (**Android** and **Apple**), the steps for connecting the RaceChip and your smartphone may vary. Please find the most important steps below. In general, you should follow the instructions given by your smartphone for the connection.

i

- The connection between the RaceChip and your smartphone is set up in the last step of the installation process.
- The RaceChip is fully functional even if there is no connection to a smartphone running the RaceChip app.
- The RaceChip is now in the factory setting **SPORT**.

1 Download the free **RaceChip+** app.

GET IT ON Google Play

Download on the App Store

2 Switch on the ignition of your car. **Do not** start the engine.

3 Activate the Bluetooth function of your smartphone.

4 Open the RaceChip+ app.

5 With opening the RaceChip+ app for the first time, the installation dialogue for chip tuning by RaceChip is shown. Touch **ADD PRODUCT** and follow the instructions given by your smartphone.

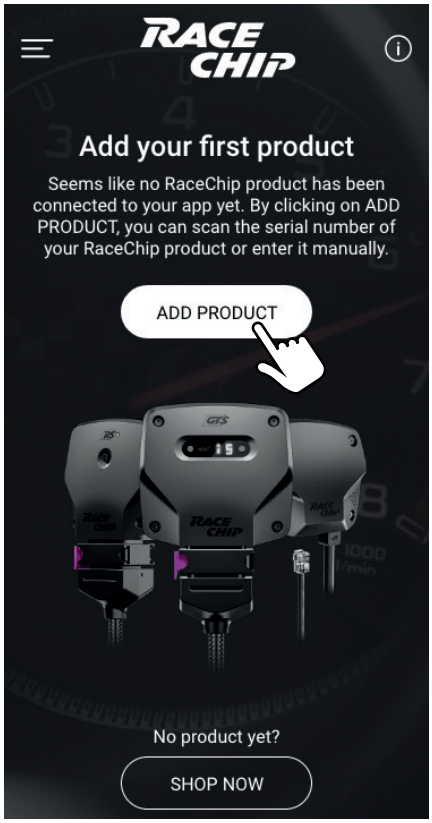

3 Installation

6 You can enter the serial number by hand (touch **MANUALLY**) or with the barcode/qrcode scanner of the camera . Confirm the entry with **NEXT**.

The 13-digit serial number or the QR code can be found on the back of the RaceChip housing. The Bluetooth PIN consists of the last 6 digits of the serial number.

Example:

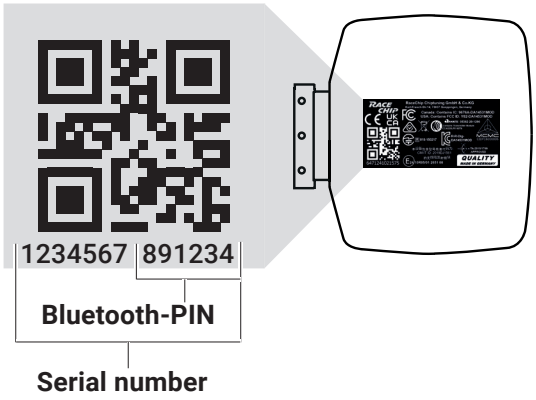

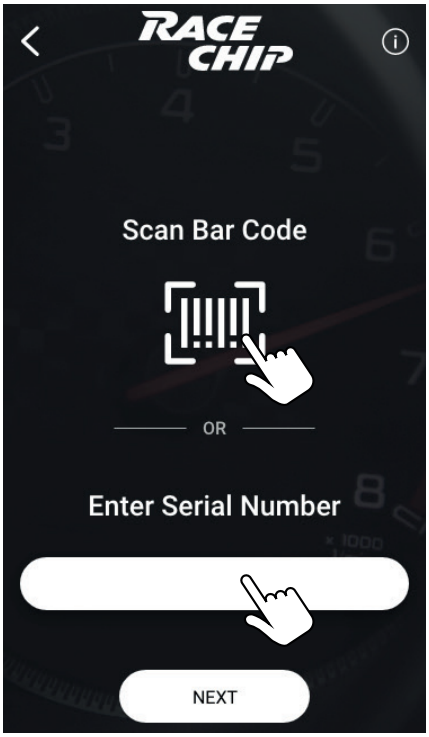

Having trouble with connecting RaceChip XLR and your phone's Bluetooth?
Follow these steps one by one until the pairing is complete:

1. Check that the car's ignition is switched on.
2. Check that the Bluetooth function on your smartphone is fully activated.
3. Check to see if the RaceChip's Bluetooth connection is active (see ***Overview of the RaceChip***). If the Bluetooth symbol is flashing or not lit, please contact our customer service.
4. Deactivate and then re-activate the Bluetooth connection. Check if RaceChip and your phone will pair now.
5. Re-start the RaceChip+ app.
6. Go to your smartphone's settings and view all discoverable Bluetooth devices. If your RaceChip (**RC Black | RC GTS | RC RS**) is not visible, please contact our customer service.

7 As soon as the connection is set up, the installation is completed.

5 Trouble Shooting

If the RaceChip does not function as it should, you can find some initial assistance here. If the suggestions here do not solve the problem, please contact our Customer Service (see ***Contact***).

Description of problem	What to do
No extra performance or performance not noticeable enough I am not satisfied with the performance level of my vehicle.	• The RaceChip App is connected to our server and can download settings specially for your car. • This means that our Customer Service can update your RaceChip's settings if you do not feel any enhancement in your car's performance. • Please contact our Customer Service. We can update your RaceChip's settings based on your description of your experience with your car. • You can update the settings on your RaceChip by going to Settings on the App (***Search for updates for my car***).
Knocking/ rattling The engine knocks or rattles (diesel engine) more under load. It runs less smoothly than in stock tune.	• If you have the impression that your engine knocks or rattles more than in stock tune, please take the car for a few test drives to be sure that your first impression was right. On the test drive, pay special attention to the engine's behaviour under load – the RaceChip only works then. On the test drives, check to see if the increased knocking/rattling occurs in all 3 tuning stages (**EFFICIENCY**, **SPORT**, **RACE**) on the RaceChip App. The information helps us to find the right solution for you quickly. • If your first impression was right, please contact our Customer Service. • If the knocking/rattling is obviously increased, a test drive is not necessary – please contact our Customer Service immediately. • The RaceChip App is connected to our server and can download settings specially for your car. • This means that our Customer Service can update your RaceChip's settings to make the knocking/rattling disappear and help the engine run as smoothly as before. • We can update your RaceChip's settings based on your description of the problem. • You can update the settings of your RaceChip by going to Settings on the App (***Search for updates for my car***).

5 Trouble Shooting

Description of problem	What to do
Engine fault light or other warning light comes on and stays on after installing the RaceChip. A warning light on the dashboard comes on and stays on after installation of the RaceChip. 	• If a warning light (e.g engine fault light) comes on, it does not automatically mean something is wrong with the engine. The lamp can simply be a measure programmed by the manufacturer to protect the engine; it can be triggered if a cable is disconnected from a sensor when there was still power in the system, for instance. (An indication that this might be the case is if the Digital User Interface lit up as soon as it was connected to the car's electrics; it should only receive power when the ignition is switched on). Please follow the steps below carefully until you have found the cause of the warning lamp and fixed it. • De-install the RaceChip wiring harness to the point that you can reconnect all the connections in your car as they were before you started installing the RaceChip. Lock the car and wait ca. 30 minutes before starting the engine. If the warning light still stays on, stopping and restarting the engine several times or waiting for even longer can sometimes help. • If the warning lights have gone out, you can re-install the RaceChip. Make sure the ignition is off and wait at least 15 minutes before disconnecting the sensors. When the installation is complete, double check all the connections to ensure the connectors are joined correctly and tightly. Please connect the Deactivation plug to the wiring harness and start the engine again. • If the warning lights do not come on, switch off the engine again and wait for 15 minutes. You can now replace the Deactivation plug with the RaceChip and start the engine again. • If the warning lights come on again now, please contact our Customer Service (see ***Contact***).

5 Trouble Shooting

Description of problem	What to do
Jolting With the RaceChip installed, my car jolts, stutters or hesitates in situations where it did not before.	• First, please check to see if the jolting, stuttering or hesitation occurs in all 3 tuning stages (**EFFICIENCY**, **SPORT**, **RACE**) on the RaceChip App. The information helps us to find the right solution for you quickly. • The RaceChip App is connected to our server and can download settings specially for your car. • This means that our Customer Service can update your RaceChip's settings to make the problem disappear and help the engine run as smoothly as before. • Please contact our Customer Service. We can update your RaceChip's settings based on your description of the problem. • You can update the settings of your RaceChip by going to Settings on the App (***Search for updates for my car***).
Quality of gear shift reduced The shift behaviour and/or the shift quality has worsened since the installation of the RaceChip. The gearbox sometimes cannot seem to find the right gear.	• First, please check to see if the shift quality is worse in all 3 tuning stages (**EFFICIENCY**, **SPORT**, **RACE**) on the RaceChip App. The information helps us to find the right solution for you quickly. • The RaceChip App is connected to our server and can download settings specially for your car. • This means that our Customer Service can update your RaceChip's settings to make the problem disappear and help your car shift gears as smoothly as before. • Please contact our Customer Service. We can update your RaceChip's settings based on your description of the problem. • You can update the settings of your RaceChip by going to Settings on the App (***Search for updates for my car***).

5 Trouble Shooting

Description of problem	What to do
Engine fault light comes on after a while and stays on After driving with the RaceChip (including acceleration) for while, the engine fault light comes on and stays on.	• Please stop at the next available opportunity and switch the engine off, but leave the ignition on. On the RaceChip App, activate the **EFFICIENCY** tuning stage and then switch the ignition off. If the warning light went on while you were driving in the **EFFICIENCY** tuning stage, please deactivate the RaceChip via the RaceChip App (see ***Operation***) and skip the next step. Lock your car and wait for ca. 30 minutes before re-starting the engine. If the warning light is still on, stopping and restarting the engine several times or leaving the car locked for a longer period of time may help. Take your car for a test drive, making sure you put the engine under load. • If the fault warning does not come on again during the test drive, please park the car and switch the engine off, but leave the ignition on. If the **SPORT** tuning stage was not active when the fault light came on for the first time, please activate it now on the RaceChip App. If it was active, you can skip the next step and contact our Customer Service straight away. After selecting the **SPORT** tuning stage, re-start the engine and take your car for a test drive, making sure you put the engine under load. Check to see if the warning light comes on again. • Contact our Customer Service with this information (see ***Contact***). • The RaceChip App is connected to our server and can download settings specially for your car. • This means that our Customer Service can update your RaceChip's settings to resolve the problem and help you to enjoy the enhanced performance you want. • You can update the settings of your RaceChip by going to Settings on the App (***Search for updates for my car***).

5 Trouble Shooting

Description of problem	What to do
Soot generation My car produces (more) soot since installing the RaceChip.	• First, please check whether your car produces (more) soot in all 3 tuning stages (**EFFICIENCY, SPORT, RACE**) on the RaceChip App. The information helps us to find the right solution for you quickly. • The RaceChip App is connected to our server and can download settings specially for your car. • This means that our Customer Service can update your RaceChip's settings and stop your car producing excess soot. • Please contact our Customer Service. We can update your RaceChip's settings based on your description of the problem. • You can update the settings of your RaceChip by going to Settings on the App (***Search for updates for my car***).
The car does not start The car's ignition does not work after installing the RaceChip	• Something probably went wrong during the installation procedure. Please follow the steps below to check that the RaceChip is installed correctly. • De-install the RaceChip wiring harness the point that you can reconnect all the connections in your car as they were before you started installing the RaceChip. (You can leave the wiring harness in the engine bay; the important thing is that it is not connected to the vehicle electrics). Lock the car and wait ca. 30 minutes before trying to start the engine again. • If the car starts, you can re-install the RaceChip. Make sure the ignition is switched off and wait at least 15 minutes before disconnecting the sensors in the engine bay. After installing the RaceChip, double check that all the connectors are correctly and firmly fixed. Go through all the steps described in ***Installation*** again. Finally, start the engine. • If the car still does not start, please contact our Customer Service (see ***Contact***).

5 Trouble Shooting

Description of problem	What to do
No noticeable fuel savings I do not notice any fuel savings	• Make sure you are comparing before-and-after fuel consumption based on the vehicle's actual consumption – on-board computers often display incorrect values. • It is important that your driving style remains the same, i.e. you do not accelerate harder or drive fast more often than before. You will not see any fuel savings either if you often drive at or near maximum load – you need to adopt an economical driving style at least some of the time in order to save fuel. • If your driving style is economical but you still do nott notice any fuel savings, please contact our Customer Service. • The RaceChip App is connected to our server and can download settings specially for your car. • This means that our Customer Service can update your RaceChip's settings and help you save fuel when you use an appropriate driving style. • You can update the settings of your RaceChip by going to Settings on the App (***Search for updates for my car***).
No connection after updating the operating system No pairing between RaceChip App and RaceChip possible after updates of the operating system on your smartphone.	• Shut down the RaceChip App (iOS: push the home button twice and close the RaceChip App; Android: Open the task manager and close the RaceChip App) and re-start it again • If that does not cure the problem, please contact our Customer Service.

5 Trouble Shooting

Description of problem	What to do
No connection No pairing between RaceChip App and RaceChip possible.	• Follow these steps one by one until the pairing is complete: • Check that the car´s ignition is switched on. • Check that the Bluetooth indicator on the Digital User Interface is on. If it is not, please contact our Customer Service. The connection problem is probably caused by a function or installation fault. • Check that the Bluetooth function on your smartphone is fully activated. • Deactivate and then re-activate the Bluetooth connection. Check if RaceChip and your phone will pair now. • Deactivate the Bluetooth connection and completely shut down the RaceChip App (iOS: push the home button twice and close the RaceChip App; Android: Open the task manager and close the RaceChip App). Activate the Bluetooth connection and open the RaceChip App again. • Go to your smartphone's settings and view all discoverable Bluetooth devices. Select "**RaceChip**" to pair your smartphone with the RaceChip. In case no connection is established, delete "**RaceChip**" from the list of discoverable Bluetooth devices. Try pairing again. • Re-start the installation dialogue of the RaceChip App. Make sure you have entered the correct Bluetooth pin. • Please contact our Customer Service if the issue still exists.

6 Contact



Our Customer Service is ready to help!

Find out how to contact us at:
www.racechip.com/service-support

Please have your customer details close by when you contact us.

Follow us on:

/racechipchiptuning

@racechipchiptuning

Legal notice

RaceChip Chiptuning GmbH & Co. KG
Karl-Frasch-Str. 14
73037 Göppingen
Germany

Sales tax identification number: DE 260672432
Registered at District Court of Ulm: HRA 721734
Tax number: 63079/11153

Personally liable partner:
RaceChip Chiptuning Verwaltungs GmbH
Chief executives: Dirk Bongardt, Kai Döhler
Head office: Karl-Frasch-Str. 14, 73037 Göppingen, Germany
Registered at HRB District Court of Ulm: HRB 724254

Detaching the connector correctly

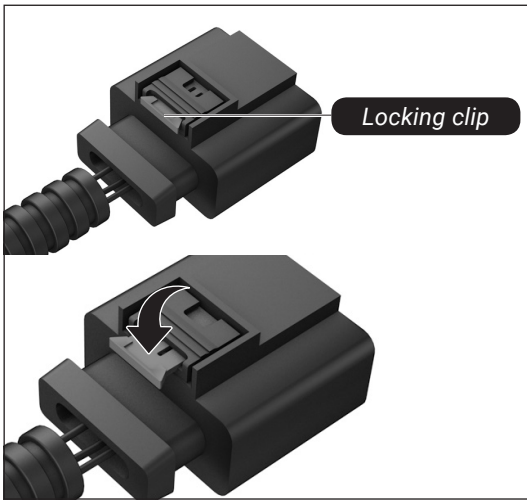

In the first step, the red ***locking clip*** is pulled out. Press the red ***locking clip***, which functions as a lever for loosening the plug and pulling it out.

Because the plug is often connected very tightly to the socket, it is helpful, when pressing the ***locking clip***, to first push the plug towards the connection socket before subsequently pulling on it.

In addition, temperature fluctuations in the engine bay can result in a type of “vacuum effect” between the plug and the socket. This can be solved by lightly “wiggling” the plug.

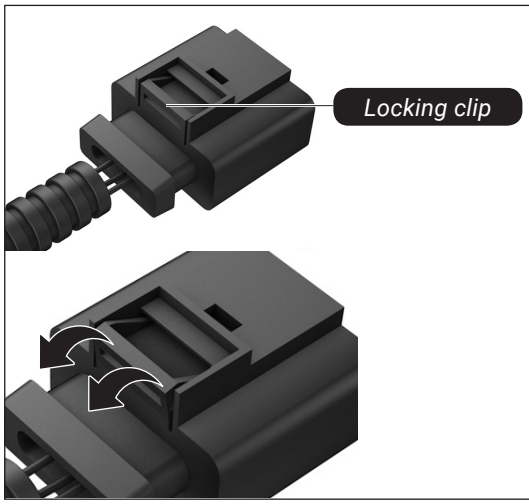

The plugs are locked into the connection sockets by means of a locking clip. Press the ***locking clip*** and pull the plug.

Because the plug is often connected very tightly to the socket, it is helpful, when pressing the ***locking clip***, to first push the plug towards the connection socket before subsequently pulling on it.

In addition, temperature fluctuations in the engine bay can result in a type of “vacuum effect” between the plug and the socket. This can be solved by lightly “wiggling” the plug.

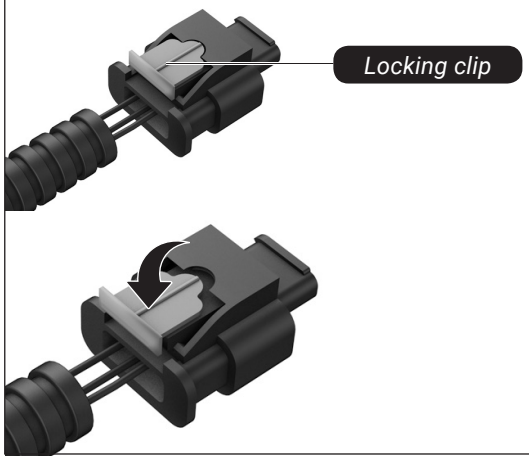

The first step involves pulling out the bright grey ***locking clip***. Press down on the bright grey ***locking clip***, which serves as a switch for releasing and removing the plug.

Because the plug is often connected very tightly to the socket, it is helpful, when pressing the ***locking clip***, to first push the plug towards the connection socket before subsequently pulling on in.

In addition, temperature fluctuations in the engine bay can result in a type of “vacuum effect” between the plug and the socket. This can be solved by lightly “wiggling” the plug.

Detaching the connector correctly

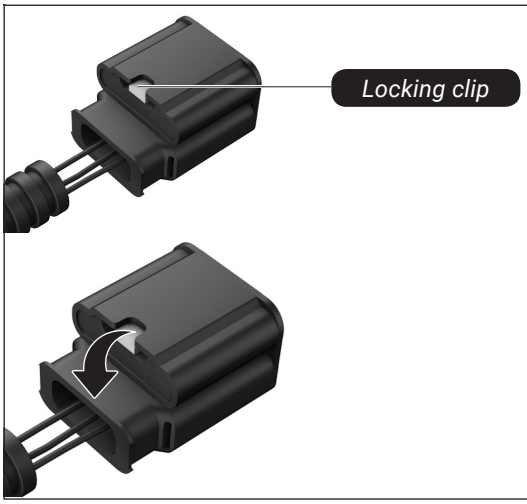

The plugs are locked into the connection sockets by means of a locking clip. Press the ***locking clip*** and pull the plug.

Because the plug is often connected very tightly to the socket, it is helpful, when pressing the ***locking clip***, to first push the plug towards the connection socket before subsequently pulling on it.

In addition, temperature fluctuations in the engine bay can result in a type of “vacuum effect” between the plug and the socket. This can be solved by lightly “wiggling” the plug.

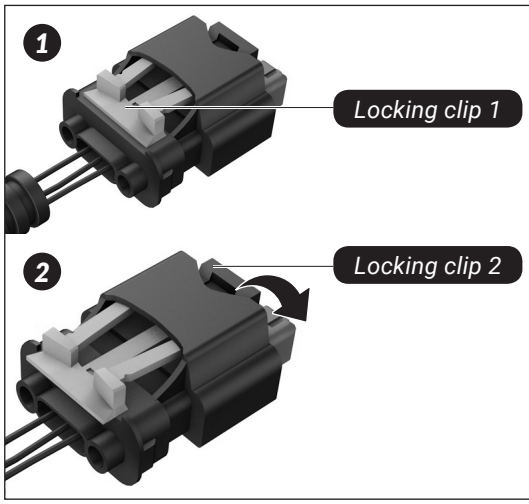

In the first step, the orange ***locking clip*** 1 is pulled out. Press the black ***locking clip*** 2, which functions as a lever for loosening the plug and pulling it out.

Because the plug is often connected very tightly to the socket, it is helpful, when pressing the ***locking clip***, to first push the plug towards the connection socket before subsequently pulling on it.

In addition, temperature fluctuations in the engine bay can result in a type of “vacuum effect” between the plug and the socket. This can be solved by lightly “wiggling” the plug.

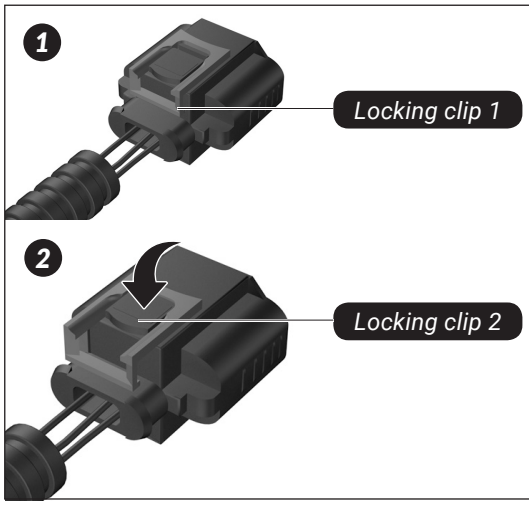

In the first step, the red ***locking clip*** 1 is pulled out. Press the black ***locking clip*** 2, which functions as a lever for loosening the plug and pulling it out.

Because the plug is often connected very tightly to the socket, it is helpful, when pressing the ***locking clip***, to first push the plug towards the connection socket before subsequently pulling on it.

In addition, temperature fluctuations in the engine bay can result in a type of “vacuum effect” between the plug and the socket. This can be solved by lightly “wiggling” the plug.

Detaching the connector correctly

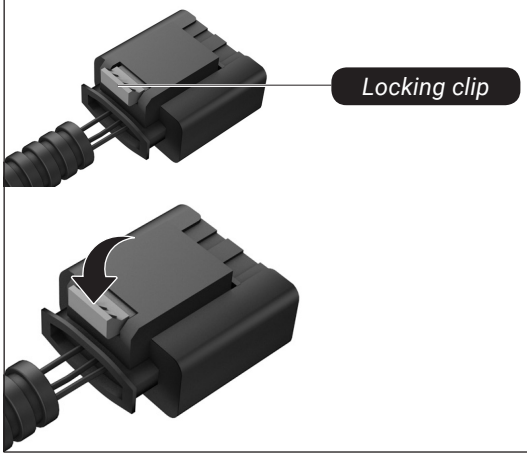

In the first step, the grey ***locking clip*** is pulled out. Press the grey ***locking clip***, which functions as a lever for loosening the plug and pulling it out.

Because the plug is often connected very tightly to the socket, it is helpful, when pressing the ***locking clip***, to first push the plug towards the connection socket before subsequently pulling on it.

In addition, temperature fluctuations in the engine bay can result in a type of “vacuum effect” between the plug and the socket. This can be solved by lightly “wiggling” the plug.

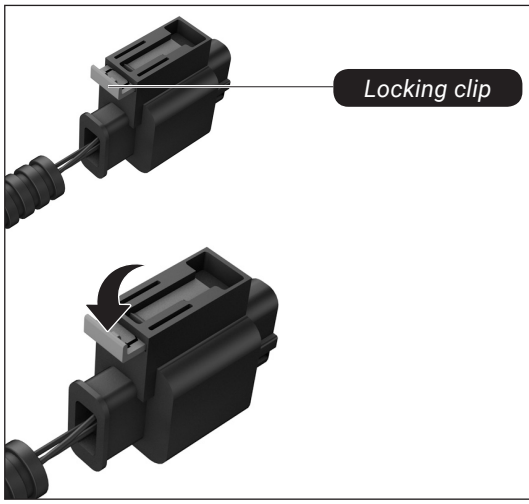

In the first step, the grey ***locking clip*** is pulled out. Press the grey ***locking clip***, which functions as a lever for loosening the plug and pulling it out.

Because the plug is often connected very tightly to the socket, it is helpful, when pressing the ***locking clip***, to first push the plug towards the connection socket before subsequently pulling on it.

In addition, temperature fluctuations in the engine bay can result in a type of “vacuum effect” between the plug and the socket. This can be solved by lightly “wiggling” the plug.

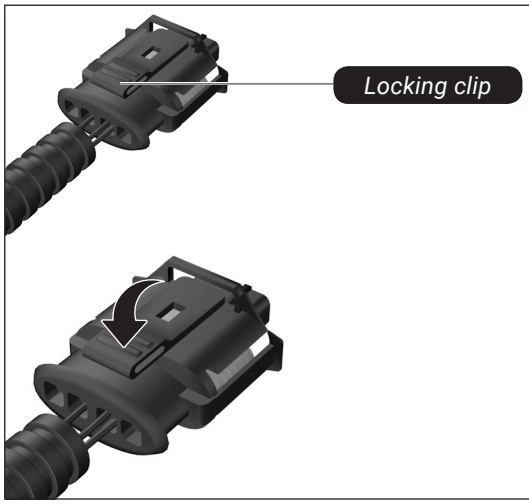

The plugs are locked into the connection sockets by means of a ***locking clip***. Press the ***locking clip*** and pull the plug.

Because the plug is often connected very tightly to the socket, it is helpful, when pressing the ***locking clip***, to first push the plug towards the connection socket before subsequently pulling on it.

In addition, temperature fluctuations in the engine bay can result in a type of “vacuum effect” between the plug and the socket. This can be solved by lightly “wiggling” the plug.

Detaching the connector correctly

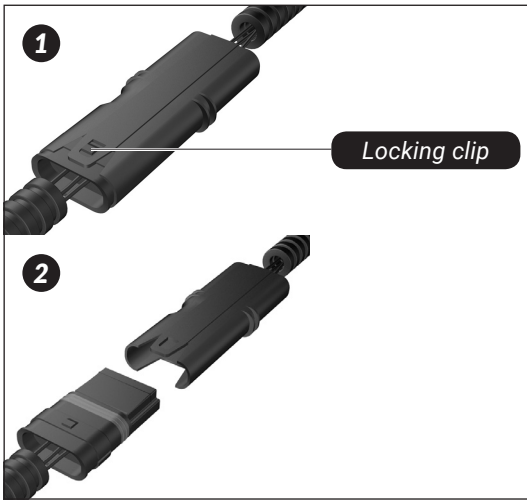

The plugs are locked into the connection sockets by means of a ***locking clip***. Pull slightly the ***locking clip*** and pull the plug.

Because the plug is often connected very tightly to the socket, it is helpful, when pressing the ***locking clip***, to first push the plug towards the connection socket before subsequently pulling on it.

In addition, temperature fluctuations in the engine bay can result in a type of “vacuum effect” between the plug and the socket. This can be solved by lightly “wiggling” the plug.

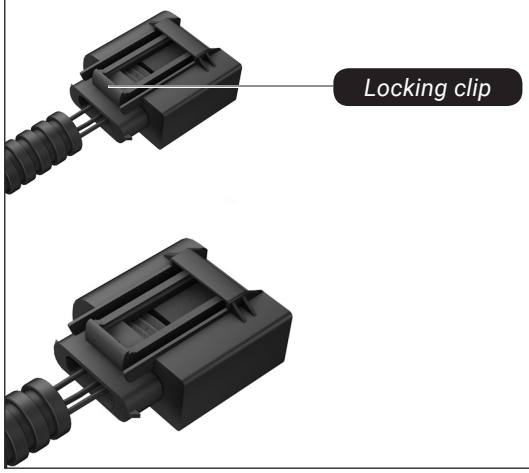

The plugs are locked into the connection sockets by means of a ***locking clip***. Press the locking clip and pull the plug.

Because the plug is often connected very tightly to the socket, it is helpful, when pressing the ***locking clip***, to first push the plug towards the connection socket before subsequently pulling on it.

In addition, temperature fluctuations in the engine bay can result in a type of “vacuum effect” between the plug and the socket. This can be solved by lightly “wiggling” the plug.

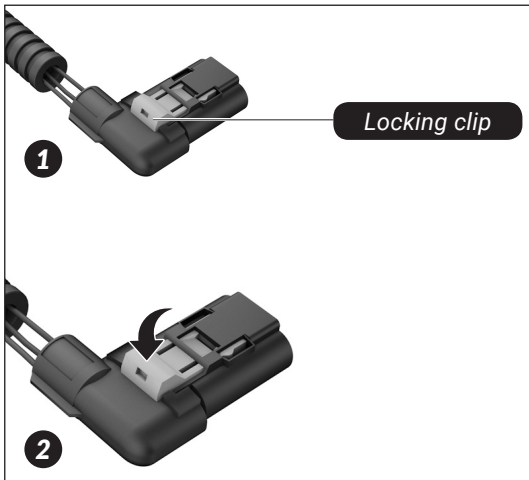

In the first step, the orange ***locking clip*** is pulled out. Press the orange ***locking clip***, which functions as a lever for loosening the plug and pulling it out.

Because the plug is often connected very tightly to the socket, it is helpful, when pressing the ***locking clip***, to first push the plug towards the connection socket before subsequently pulling on it.

In addition, temperature fluctuations in the engine bay can result in a type of “vacuum effect” between the plug and the socket. This can be solved by lightly “wiggling” the plug.

Detaching the connector correctly



The plugs are locked into the connection sockets by means of a ***locking clip***. Press the ***locking clip*** and pull the plug.

Because the plug is often connected very tightly to the socket, it is helpful, when pressing the ***locking clip***, to first push the plug towards the connection socket before subsequently pulling on it.

In addition, temperature fluctuations in the engine bay can result in a type of “vacuum effect” between the plug and the socket. This can be solved by lightly “wiggling” the plug.

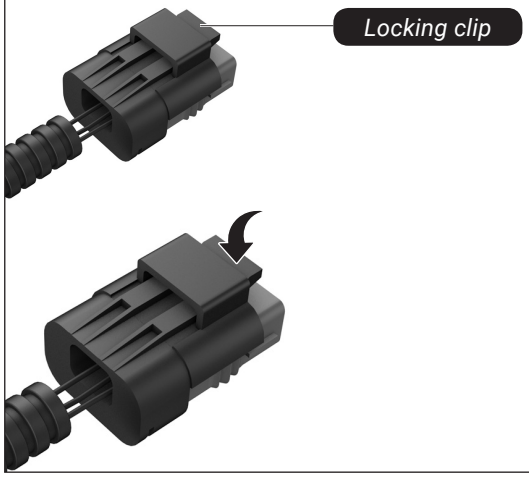

The plugs are locked into the connection sockets by means of a ***locking clip***. Press the ***locking clip*** and pull the plug.

Because the plug is often connected very tightly to the socket, it is helpful, when pressing the ***locking clip***, to first push the plug towards the connection socket before subsequently pulling on it.

In addition, temperature fluctuations in the engine bay can result in a type of “vacuum effect” between the plug and the socket. This can be solved by lightly “wiggling” the plug.

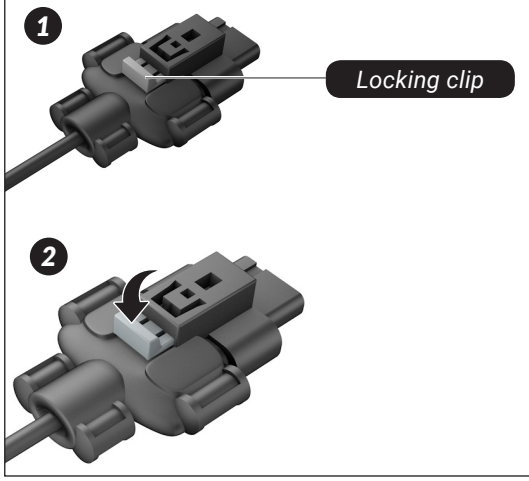

The first step involves pulling out the bright grey ***locking clip***. Press down on the bright grey ***locking clip***, which serves as a switch for releasing and removing the plug.

Because the plug is often connected very tightly to the socket, it is helpful, when pressing the ***locking clip***, to first push the plug towards the connection socket before subsequently pulling on in.

In addition, temperature fluctuations in the engine bay can result in a type of “vacuum effect” between the plug and the socket. This can be solved by lightly “wiggling” the plug.