PLEASE READ BEFORE STARTING INSTALLATION!

RACE CHIP



RS

User Manual

Opel Agila (H00) 1.3 CdTi

Contents

1 Scope of delivery ..... *A*

2 Overview of the RaceChip ..... *B*

3 Installation ..... *C*

4 Fine tuning ..... *D*

5 Trouble Shooting ..... *E*

6 Contact ..... *F*

Overview and explanation of symbols

⚠ **Warnings** and important information – **please read!**

General information on installation and use

Tips to assist installation and use

1 Scope of delivery

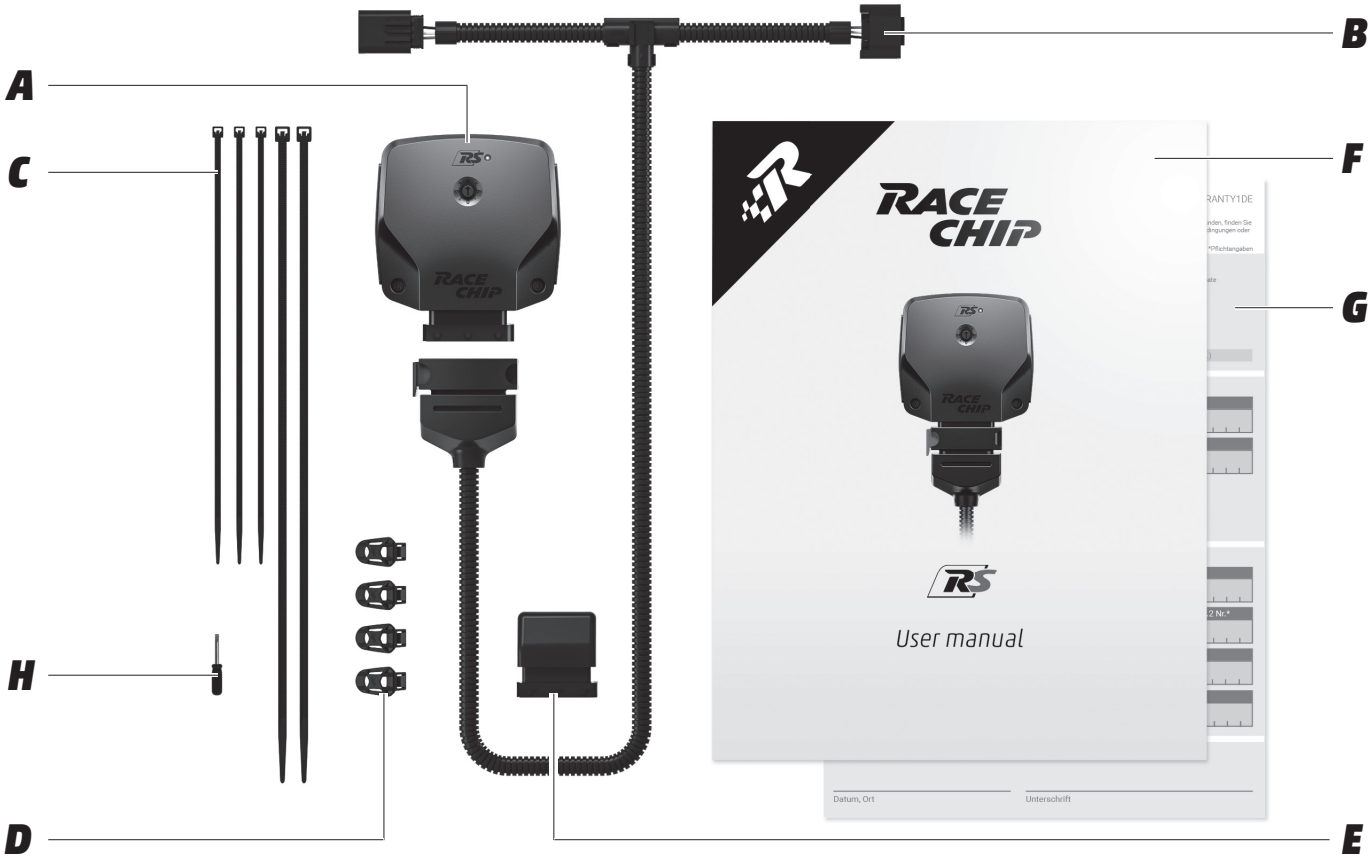

A ***RaceChip RS***
calibrated specifically for your vehicle

B ***Wiring harness***
automobile-grade, compatible with your vehicle [1]

C ***Cable ties***
2 x long cable ties
3 x short cable ties

D ***Fixing system Pro***
4 x 360° fixing clips

E ***Deactivation plug***
returns your engine to stock tune

F ***User Manual***
installation and operation

G ***Engine warranty***
for your peace of mind

H ***Screwdriver***
for selecting mappings on the rotary control Pro

[1] Picture may differ from delivered product.

2 Overview of the RaceChip

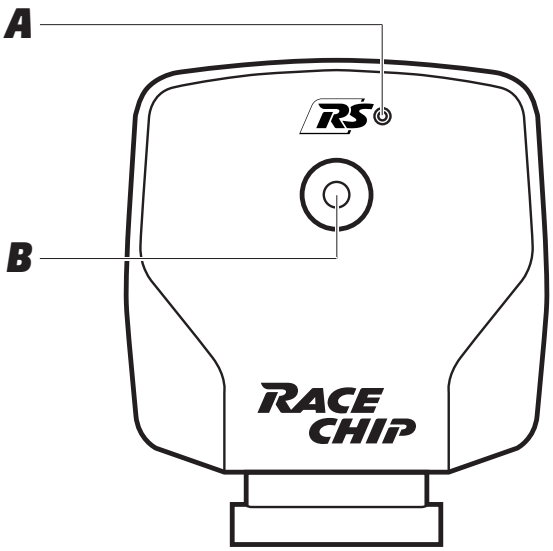

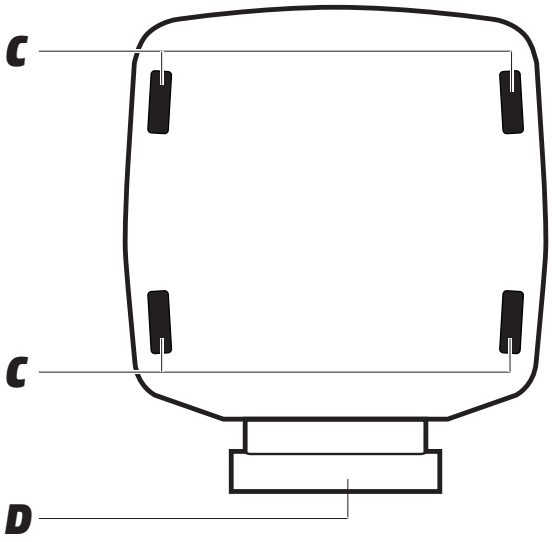

A Power ON light; lights only when the vehicle ignition is on and power is being supplied to the RaceChip.

B Rotary control Pro for selecting mappings (see ***Fine tuning***)

C Slot for 360° fixing clips.

D FCI plug for connecting to the vehicle's wiring.

3 Installation

Step 1 of 6 – Preparation

⚠ **Before installing the RaceChip, please wait for your engine to cool down. Otherwise there is a risk of sustaining burns.**

1 Open your vehicle's bonnet, and close and lock the doors.

2 **Wait about 10 minutes** before starting ***Step 2***, as all current consumers must have switched themselves off.

Generally speaking, you do not require special tools to perform the installation. If you need a tool, we will tell you when you get to the relevant step in these instructions. You will probably find wire cutters useful for clipping off the loose ends of cable ties.

i

- For cars with "**Keyless Go**": after locking the car, place the key out of signal range (about 10 m from the car).
- If an **alarm system** is fitted: disable the alarm before starting installation.
- Some cars **will not lock completely** if the bonnet is open and electrical consumers are still active. If this is the case with your car, push the bonnet catch over manually, lock the car again and wait ca. 15 minutes. When you have finished the installation, do not forget to release the catch again by pulling the bonnet release lever.
- If you have any questions or difficulties during the installation, please refer to Trouble Shooting for hints and tips.
- Our Customer Service is of course always ready to help. See Contact for details.

3 Installation

Step 2 of 6 - Removing the engine cover

i	The pictures on the following pages are for demonstration purposes only – details may be in your car's engine bay. However, the installation process is identical.

The engine cover is held in place by clips (**A**) or screws (**B**).

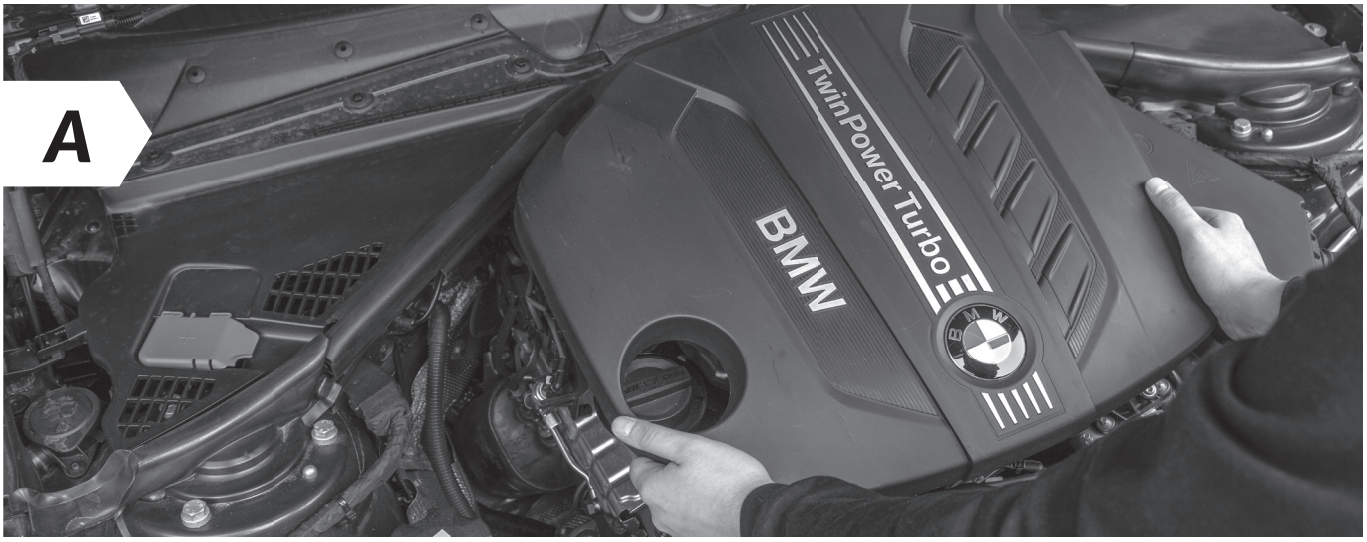

- Remove the engine cover and place it next to the car. You may have to jiggle the cover slightly to release it from the holding clips.

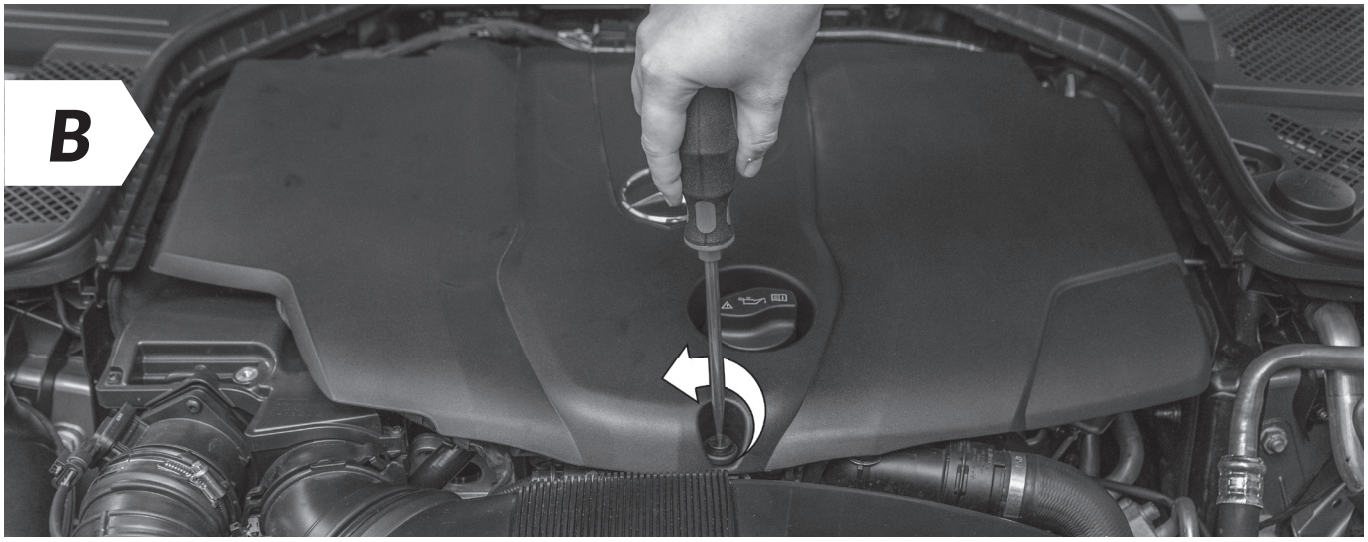

- In some vehicles it is necessary to loosen one or more screws before you can remove the engine cover.
- If there is no cover on your engine, you can proceed directly to ***step 3***.

3 Installation

Step 3 of 6 – Connection to common rail sensor

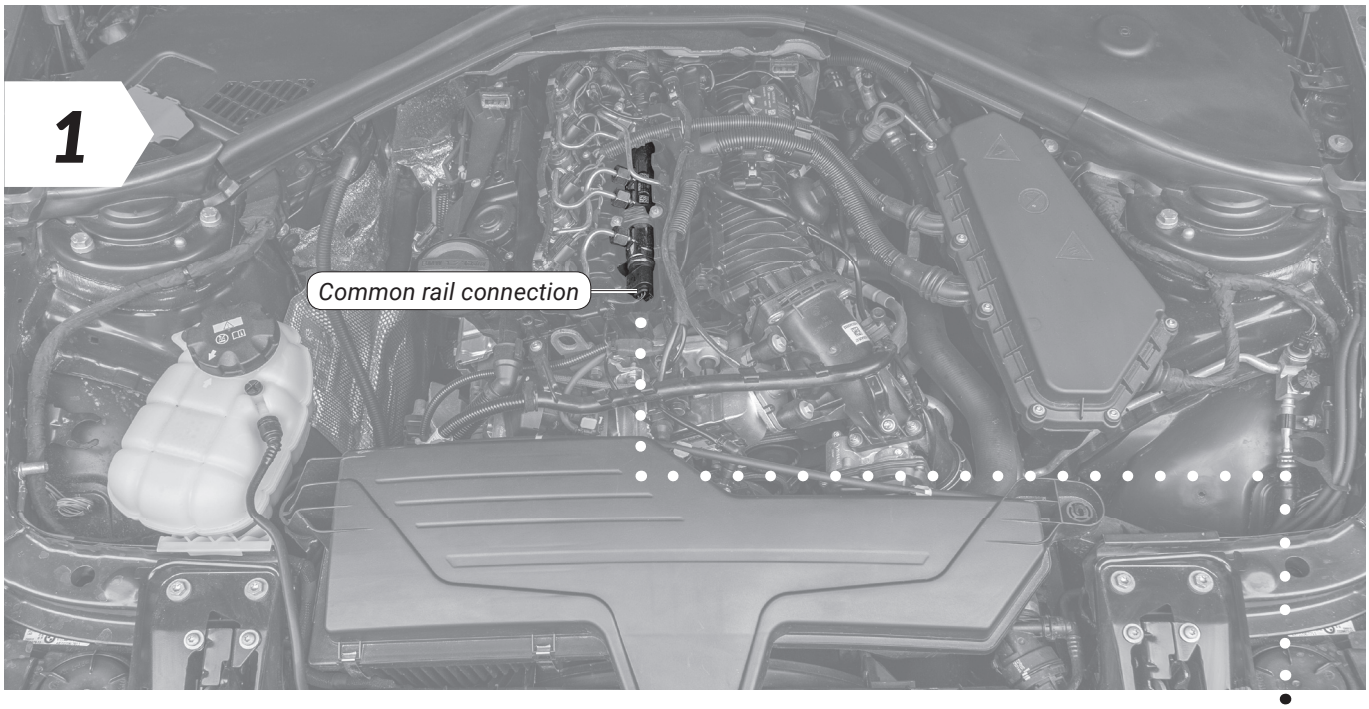

- First locate the common rail sensor connection in your engine bay.
- The common rail sensor connection is located either at one of the ends of or centrally on the common rail and can be clearly identified by the large union nut.
- The best way to find the common rail itself is by following the injection lines. These always lead directly from the injection system to the cylinders, i.e. they can be traced back from the engine block.

Setup illustration

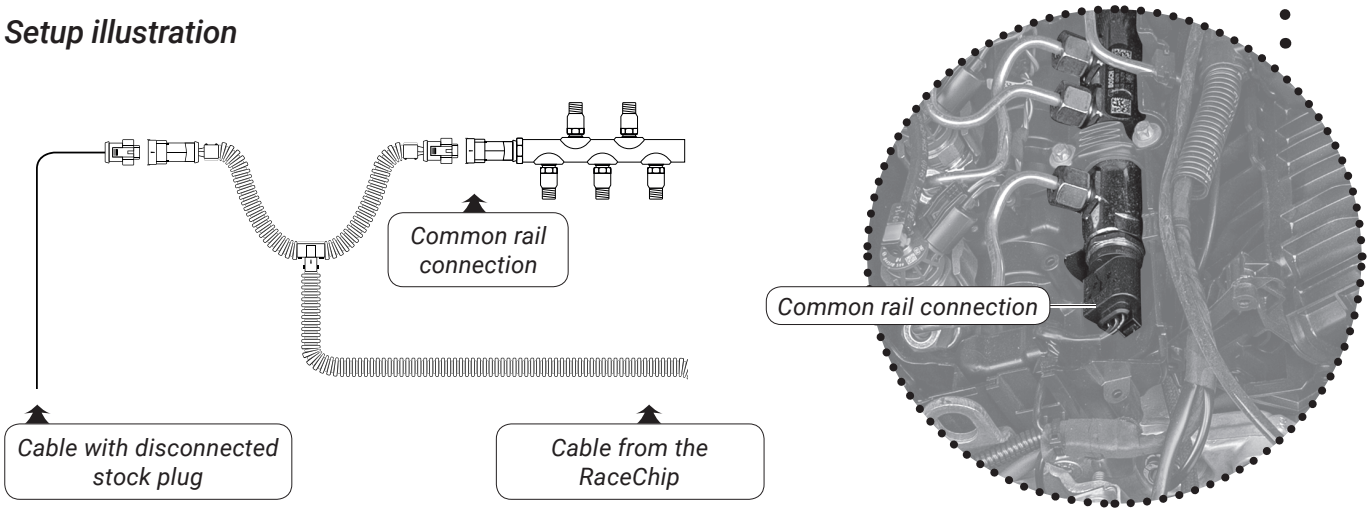

3 Installation

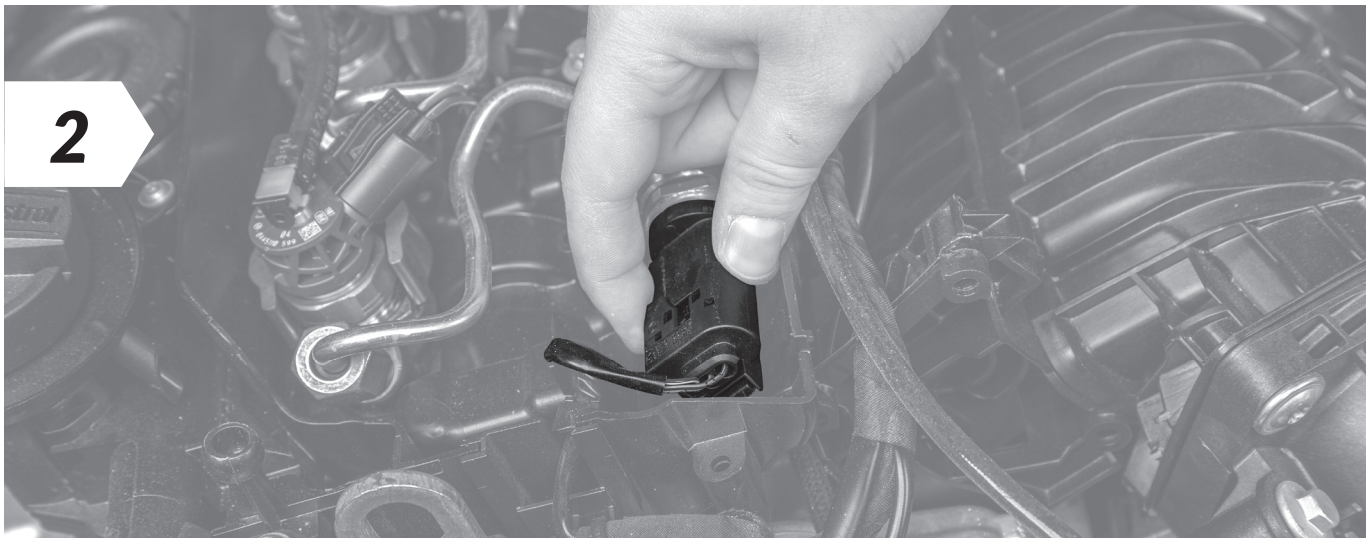

- Disconnect the plug from the common rail sensor.

If you experience difficulties disconnecting the common rail sensor, see ***Detaching the Connector Correctly*** (separate document) for assistance.



- Now connect the end of the RaceChip wiring harness to the disconnected connector and the other end to the sensor.

Make sure that the plug's locking clip engages again. You should hear a sharp CLICK.

3 Installation

Step 4 of 6 – Connecting the RaceChip and first function test

1 **Disconnect the deactivation plug from the wiring harness**

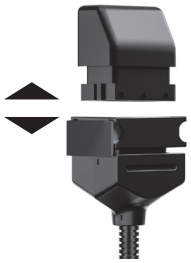

2 **Connect the RaceChip**



i

- If the green LED lights up immediately after connecting the RaceChip, it means there was still power in the system during installation.
- In some cases, this can lead to an error message during the first function test. Please refer to Trouble Shooting for a solution.

3 **Carrying out function test**

- Position the RaceChip and the wiring harness safely in the engine bay. Do not fix anything in place yet.
- Switch the ignition on. **DO NOT** start the engine.
- Check for the following:
  - Control lights on the dashboard light up and go out as normal.
  - The Power ON lamp on the RaceChip lights up (see ***Overview of the RaceChip***).
- If all the above happens, you can start the engine. It should start as normal and should react to the throttle when idling.
- Switch off the engine and ignition.

i

- If your car will not start as normal, please refer to ***Trouble Shooting*** for hints and tips.
- Our Customer Service is of course always ready to help. See ***Contact*** for details.

3 Installation

Step 5 of 6 – Fixing RaceChip and wiring harness

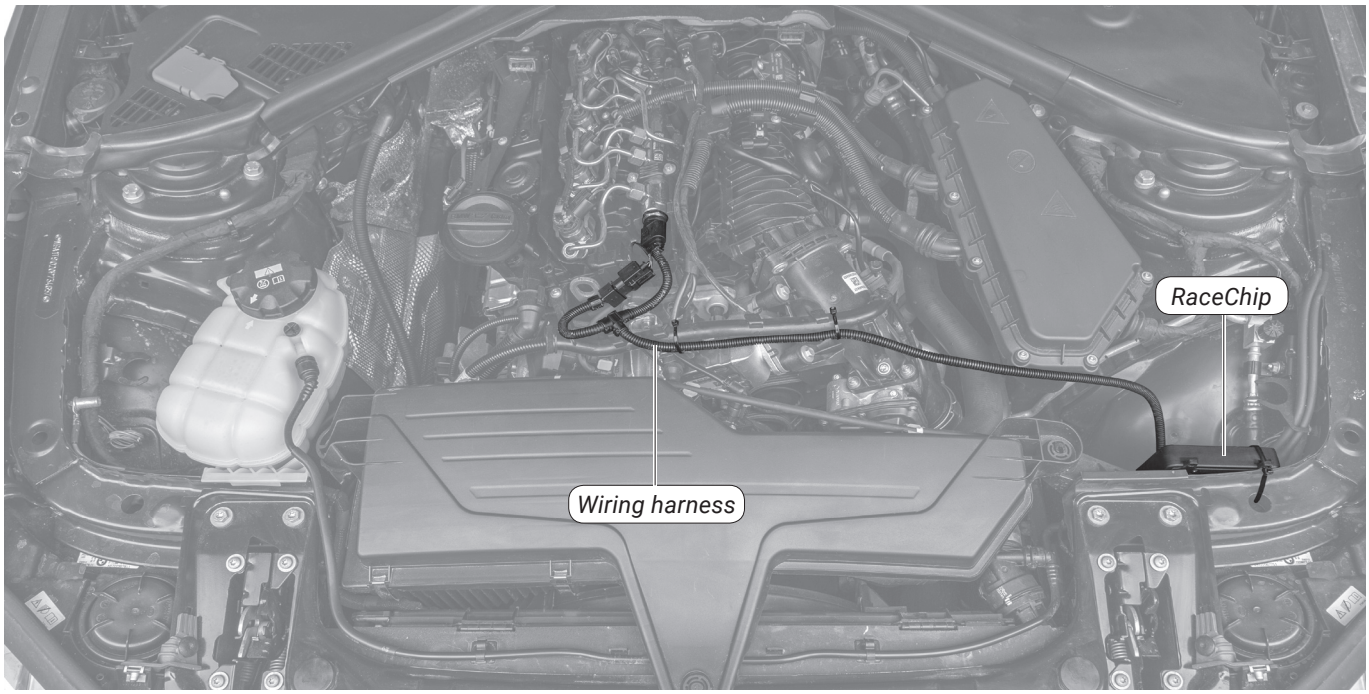

- Before fixing the RaceChip in place in the engine bay, ensure that the wiring harness can also be routed and fixed securely without putting it under excessive tension.

- Use the 360° fixing clips included to fix the RaceChip and thread the cable ties through the fixing clips to hold the wiring harness in place.

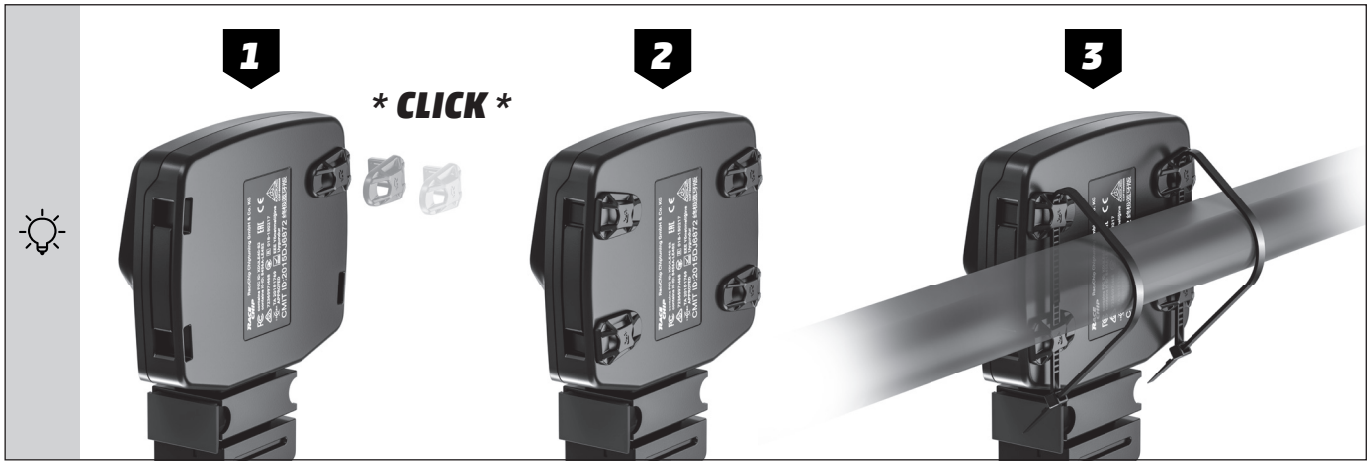

- If you need to remove the RaceChip at a later date, you can simply release the clips and do not have to cut any cable ties.

3 Installation

- Route the cable along a suitable path (for example, along existing wiring harness) and then fasten it using the supplied cable tie.

⚠

- When selecting a fastening point, make sure that the RaceChip is protected from exposure to water, heat, and vibrations.
- Do not wrap the RaceChip in an airtight bag as this can lead to a built up of condensation.
- Do not route the cable in areas in your vehicle that become overly hot during operation (e.g. the exhaust system, turbocharger, etc.).
- Do not route the cable along movable parts.
- Never fasten the cable onto hoses (e.g. a brake hose) as this could result in abrasion.

Step 6 of 6 – Finishing the installation in the engine bay

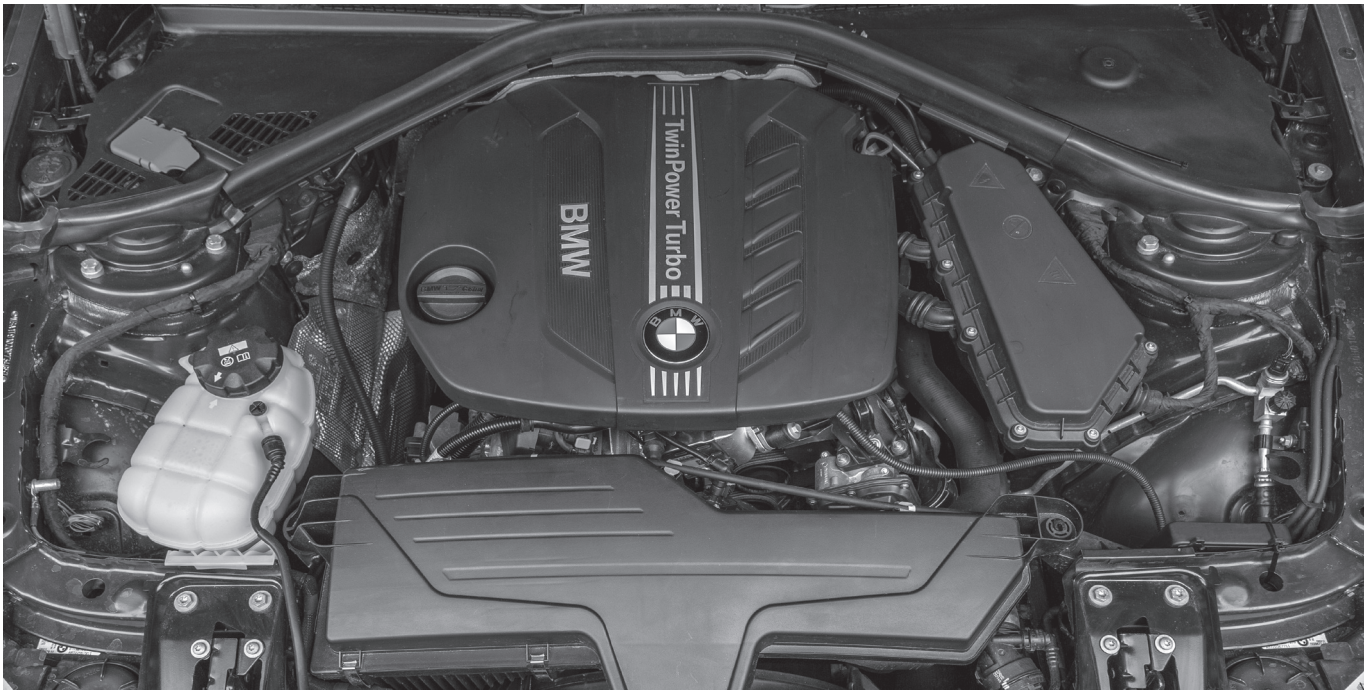

- Re-attach the cover of your engine and close the bonnet.
- The basic installation is now complete and the RaceChip can be used (in the **SPORT** tuning stage if you have **app control**).
- Take your car for a test drive. If you have any questions, do not hesitate to contact our Customer Service department (see ***Contact*** for details).

4 Fine tuning

The RaceChip has been calibrated specifically for the engine in your car, and further adjustment is generally not necessary in order to get the best performance. However, performance tolerances or the condition of the engine sometimes mean that Fine tuning is needed after installing the RaceChip.

The rotary control Pro (see ***Overview of the RaceChip***) allows you to fine tune the RaceChip quickly and easily, letting you get the best from your RaceChip-enhanced engine.

Fine tuning may be necessary if the following occurs:

A ***Engine idles more roughly than in stock tune.***

i Engine runs roughly, knocks or “pinks” under load, or the engine warning light comes on.

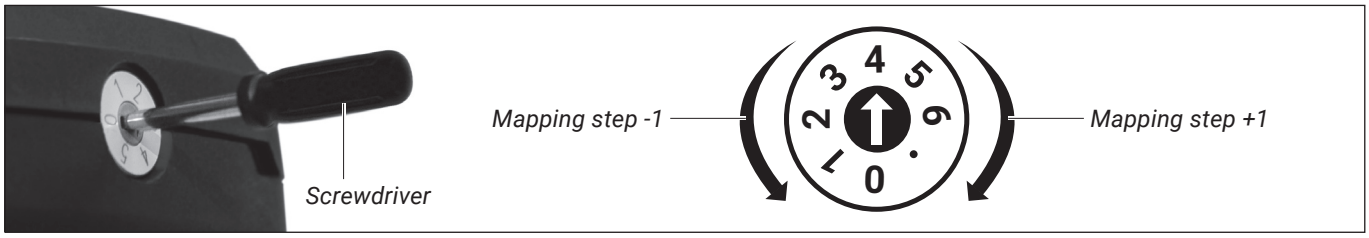

⚠ **Use the rotary control Pro to change mappings only with the ignition switched on but without the engine running.**

- Mapping **4** is the factory setting.
- First activate Mapping **1**.
- Take your car for a test drive. If the engine performs as smoothly as you want, i.e. no hesitation or knocking, please activate Mapping **2** and go for another test drive.
- If the engine still performs as smoothly as you want, repeat the previous step.
- If the engine does not perform as smoothly as you want with one of the mappings, go back to the previous mapping – this is the right one for your engine.

i If your engine does not run smoothly with any of the mappings or if the engine control light is permanently on after making all the adjustments (and after switching the ignition off and waiting 15 minutes), please contact our Customer Service (see ***Contact*** for details).

4 Fine tuning

B *Making the enhanced performance more noticeable*

i If the driver does not experience the extra performance, it means the driver cannot feel the difference from stock tuning.

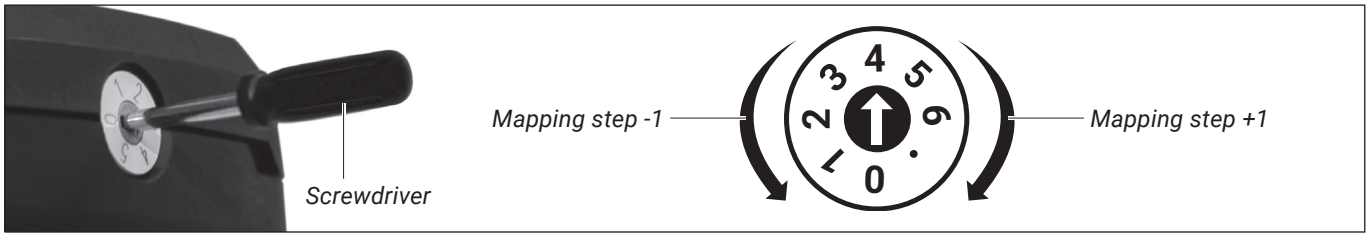

⚠ **Use the rotary control Pro to change mappings only with the ignition switched on but without the engine running.**

- Mapping **4** is the factory setting.
- First activate Mapping **5**.
- Take your car for a test drive. Activate Mapping **6** only if you do not experience the enhanced performance strongly enough.
- If the engine does not perform as smoothly as you want, activate the next mapping down the scale (e.g. from **6** to **5**).

i

- **Mapping 0** puts the engine into stock tune with the RaceChip installed.
- You can also use the **deactivation plug** to return you car to stock tune without having to remove the wiring harness. In order to use the deactivation plug, you need to remove the RaceChip from the wiring harness connector and replace it with the deactivation plug.
- Before replacing the RaceChip with the deactivation plug, first ensure that there is no residual charge in the car's electrics (see ***Step 1***).

5 Trouble Shooting

If the RaceChip does not function as it should, you can find some initial assistance here. If the suggestions here do not solve the problem, please contact our Customer Service (see ***Contact***).

Description of problem	What to do
No extra performance or performance not noticeable enough I am not satisfied with the performance level of my vehicle.	• You can find detailed instructions on how to make the extra performance more noticeable in ***Fine tuning*** (section B).
Knocking/ rattling The engine knocks or rattles (diesel engine) more under load. It runs less smoothly than in stock tune.	• If you have the impression that your engine knocks or rattles more than in stock tune, please take the car for a few test drives to be sure that your first impression was right. On the test drive, pay special attention to the engine's behaviour under load – the RaceChip only works then. • If your first impression was right, you can find detailed instructions on how to make the engine run smoothly again in ***Fine tuning*** (section A). • If the knocking/rattling is very noticeable, you can carry out the steps described in ***Fine tuning*** immediately.
Jolting With the RaceChip installed, my car jolts, stutters or hesitates in situations where it did not before.	• You can find detailed instructions on how to make the engine run smoothly again in ***Fine tuning*** (section A). • If that does not cure the problem, please contact our Customer Service; if you can describe the circumstances when the problem occurs, our Customer Service can make further adjustments.
Quality of gear shift reduced The shift behaviour and/or the shift quality has worsened since the installation of the RaceChip. The gearbox sometimes cannot seem to find the right gear.	• Select the next lowest mapping (see ***Fine tuning***, section A). Repeat this procedure until you are happy with the gear shifting. • If that does not cure the problem, please contact our Customer Service; if you can describe the circumstances when the problem occurs, our Customer Service can make further adjustments.

5 Trouble Shooting

Description of problem	What to do
Engine fault light or other warning light comes on and stays on after installing the RaceChip. A warning light on the dashboard comes on and stays on after installation of the RaceChip. 	• If a warning light (e.g engine fault light) comes on, it does not automatically mean something is wrong with the engine. The lamp can simply be a measure programmed by the manufacturer to protect the engine; it can be triggered if a cable is disconnected from a sensor when there was still power in the system, for instance. (One indication is if the Power On control lamp (see ***Overview of the RaceChip***) lit up as soon as the wiring harness was connected; it should light up only when the ignition is switched on). Please follow the steps below carefully until you have found the cause of the warning lamp and fixed it. • De-install the RaceChip wiring harness to the point that you can reconnect all the connections in your car as they were before you started installing the RaceChip. Lock the car and wait ca. 30 minutes before starting the engine. If the warning light still stays on, stopping and restarting the engine several times or waiting for even longer can sometimes help. • If the warning lights have gone out, you can re-install the RaceChip. Make sure the ignition is off and wait at least 15 minutes before disconnecting the sensors. When the installation is complete, double check all the connections to ensure the connectors are joined correctly and tightly. Please connect the Deactivation plug to the wiring harness and start the engine again. • If the warning lights do not come on, switch off the engine again and wait for 15 minutes. You can now replace the Deactivation plug with the RaceChip and start the engine again. • If the warning lights come on again now, please contact our Customer Service (see ***Contact***).
Soot generation My car produces (more) soot since installing the RaceChip.	• You can find detailed instructions on how to make the engine run smoothly again in ***Fine tuning*** (section A). The steps will also help stop the engine producing excess soot.

5 Trouble Shooting

Description of problem	What to do
Engine fault light comes on after a while and stays on After driving with the RaceChip (including acceleration) for while, the engine fault light comes on and stays on.	• Please park your car and switch the engine off while leaving the ignition on. Activate **Mapping 1** (see ***Fine tuning***, section A) and then turn the ignition off. Lock the car and wait ca. 30 minutes before starting the engine again. If the warning light does not come on again, you can follow the steps described in ***Fine tuning*** (section A) to activate the right mapping. • If the fault light is still on, please activate **Mapping 0** or replace the RaceChip with the Deactivation plug (supplied). This returns your car to stock tuning. Lock the car and wait ca. 30 minutes before starting the engine again. Please contact our Customer Service (see ***Contact***) and tell them what you see (warning is on/not on).
The car does not start The car's ignition does not work after installing the RaceChip.	• Something probably went wrong during the installation procedure. Please follow the steps below to check that the RaceChip is installed correctly. • De-install the RaceChip wiring harness the point that you can reconnect all the connections in your car as they were before you started installing the RaceChip. (You can leave the wiring harness in the engine bay; the important thing is that it is not connected to the vehicle electrics). Lock the car and wait ca. 30 minutes before trying to start the engine again. • If the car starts, you can re-install the RaceChip. Make sure the ignition is switched off and wait at least 15 minutes before disconnecting the sensors in the engine bay. After installing the RaceChip, double check that all the connectors are correctly and firmly fixed. Go through all the steps described in Installation again. Finally, start the engine. • If the car still does not start, please contact our Customer Service (see ***Contact***).

5 Trouble Shooting

Description of problem	What to do
No noticeable fuel savings I do not notice any fuel savings	• Make sure you are comparing before-and-after fuel consumption based on the vehicle's actual consumption – on-board computers often display incorrect values. • It is important that your driving style remains the same, i.e. you do not accelerate harder or drive fast more often than before. You will not see any fuel savings either if you often drive at or near maximum load – you need to adopt an economical driving style at least some of the time in order to save fuel. • If your driving style matches the description but you still do not see any fuel savings, please select the next highest mapping (see ***Fine tuning***, section B). After selecting a new mapping, check the actual consumption to see if there has been any reduction.

6 Contact



Our Customer Service is ready to help!

Find out how to contact us at:
www.racechip.com/service-support

Please have your customer details close by when you contact us.

Follow us on:

/racechipchiptuning

@racechipchiptuning

Legal notice

RaceChip Chiptuning GmbH & Co. KG
Kar-Frasch-Str. 14
73037 Göppingen
Germany

Sales tax identification number: DE 260672432
Registered at District Court of Ulm: HRA 721734
Tax number: 63079/11153

Personally liable partner:
RaceChip Chiptuning Verwaltungs GmbH
Chief executives: Dirk Bongardt, Kai Döhler
Head office: Karl-Frasch-Str. 14, 73037 Göppingen, Germany
Registered at HRB District Court of Ulm: HRB 724254

Detaching the connector correctly

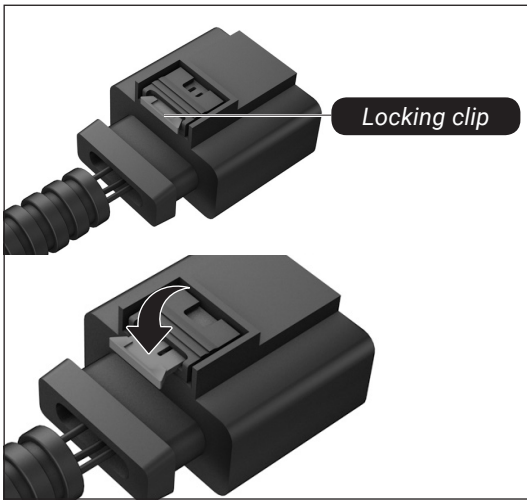

In the first step, the red ***locking clip*** is pulled out. Press the red ***locking clip***, which functions as a lever for loosening the plug and pulling it out.

Because the plug is often connected very tightly to the socket, it is helpful, when pressing the ***locking clip***, to first push the plug towards the connection socket before subsequently pulling on it.

In addition, temperature fluctuations in the engine bay can result in a type of “vacuum effect” between the plug and the socket. This can be solved by lightly “wiggling” the plug.

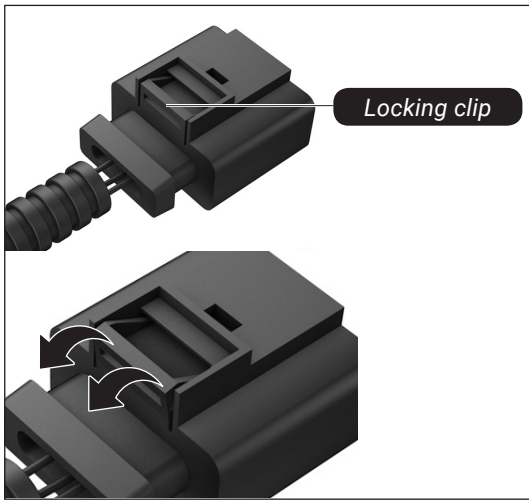

The plugs are locked into the connection sockets by means of a locking clip. Press the ***locking clip*** and pull the plug.

Because the plug is often connected very tightly to the socket, it is helpful, when pressing the ***locking clip***, to first push the plug towards the connection socket before subsequently pulling on it.

In addition, temperature fluctuations in the engine bay can result in a type of “vacuum effect” between the plug and the socket. This can be solved by lightly “wiggling” the plug.

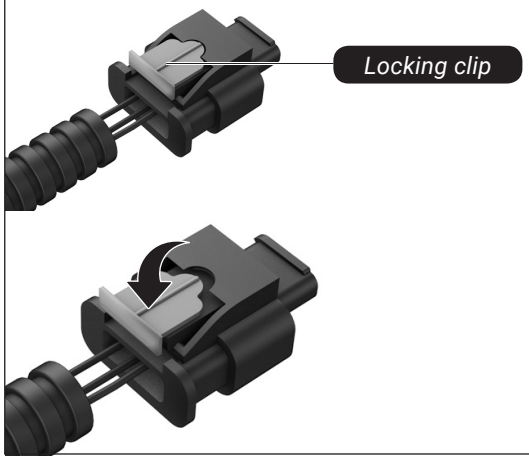

The first step involves pulling out the bright grey ***locking clip***. Press down on the bright grey ***locking clip***, which serves as a switch for releasing and removing the plug.

Because the plug is often connected very tightly to the socket, it is helpful, when pressing the ***locking clip***, to first push the plug towards the connection socket before subsequently pulling on in.

In addition, temperature fluctuations in the engine bay can result in a type of “vacuum effect” between the plug and the socket. This can be solved by lightly “wiggling” the plug.

Detaching the connector correctly

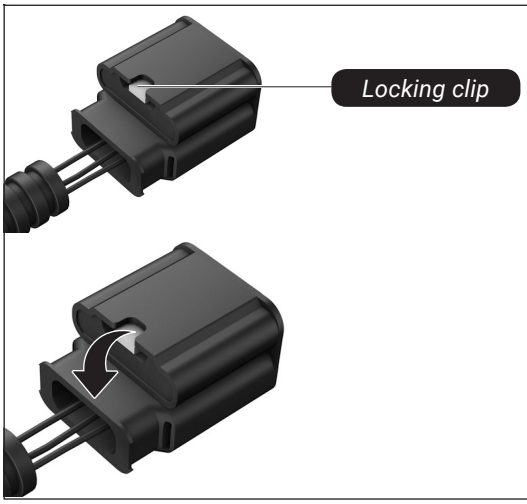

The plugs are locked into the connection sockets by means of a locking clip. Press the ***locking clip*** and pull the plug.

Because the plug is often connected very tightly to the socket, it is helpful, when pressing the ***locking clip***, to first push the plug towards the connection socket before subsequently pulling on it.

In addition, temperature fluctuations in the engine bay can result in a type of “vacuum effect” between the plug and the socket. This can be solved by lightly “wiggling” the plug.

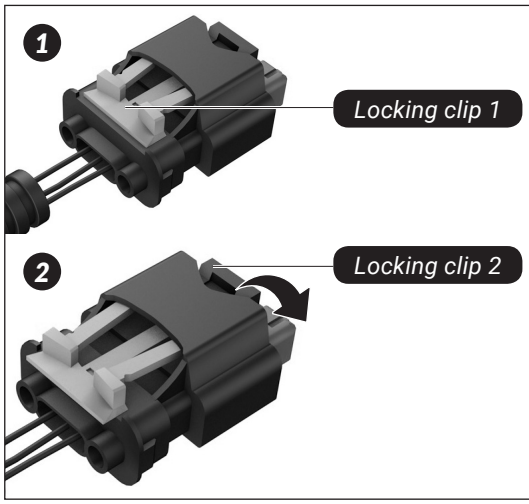

In the first step, the orange ***locking clip*** 1 is pulled out. Press the black ***locking clip*** 2, which functions as a lever for loosening the plug and pulling it out.

Because the plug is often connected very tightly to the socket, it is helpful, when pressing the ***locking clip***, to first push the plug towards the connection socket before subsequently pulling on it.

In addition, temperature fluctuations in the engine bay can result in a type of “vacuum effect” between the plug and the socket. This can be solved by lightly “wiggling” the plug.

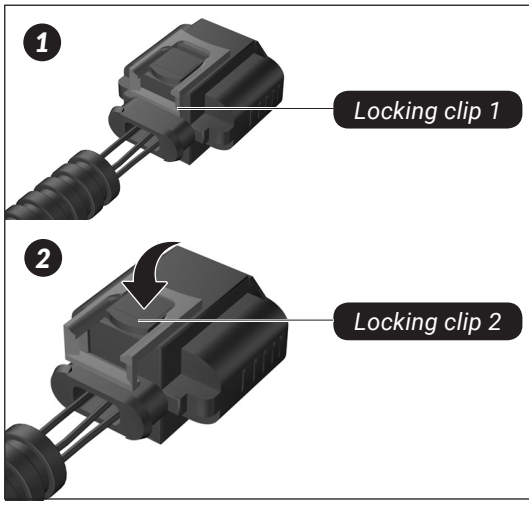

In the first step, the red ***locking clip*** 1 is pulled out. Press the black ***locking clip*** 2, which functions as a lever for loosening the plug and pulling it out.

Because the plug is often connected very tightly to the socket, it is helpful, when pressing the ***locking clip***, to first push the plug towards the connection socket before subsequently pulling on it.

In addition, temperature fluctuations in the engine bay can result in a type of “vacuum effect” between the plug and the socket. This can be solved by lightly “wiggling” the plug.

Detaching the connector correctly

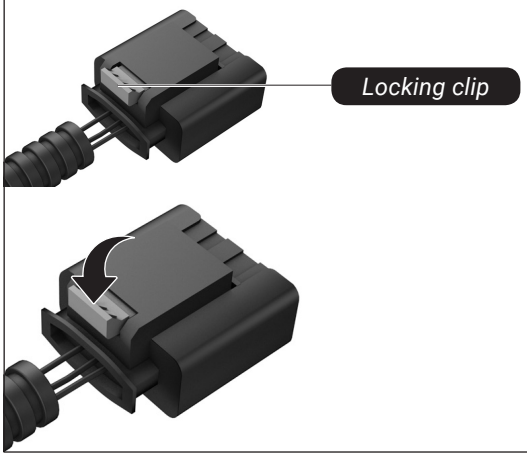

In the first step, the grey ***locking clip*** is pulled out. Press the grey ***locking clip***, which functions as a lever for loosening the plug and pulling it out.

Because the plug is often connected very tightly to the socket, it is helpful, when pressing the ***locking clip***, to first push the plug towards the connection socket before subsequently pulling on it.

In addition, temperature fluctuations in the engine bay can result in a type of “vacuum effect” between the plug and the socket. This can be solved by lightly “wiggling” the plug.

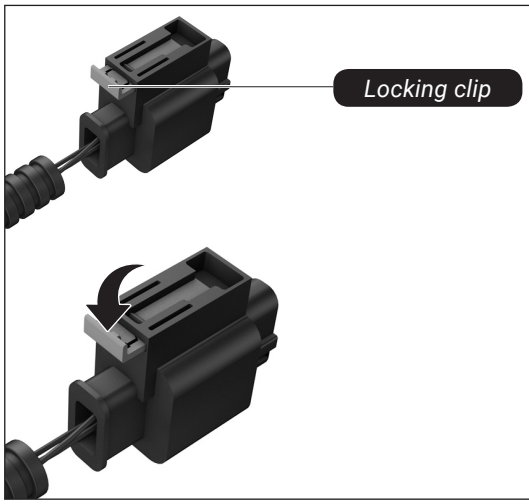

In the first step, the grey ***locking clip*** is pulled out. Press the grey ***locking clip***, which functions as a lever for loosening the plug and pulling it out.

Because the plug is often connected very tightly to the socket, it is helpful, when pressing the ***locking clip***, to first push the plug towards the connection socket before subsequently pulling on it.

In addition, temperature fluctuations in the engine bay can result in a type of “vacuum effect” between the plug and the socket. This can be solved by lightly “wiggling” the plug.

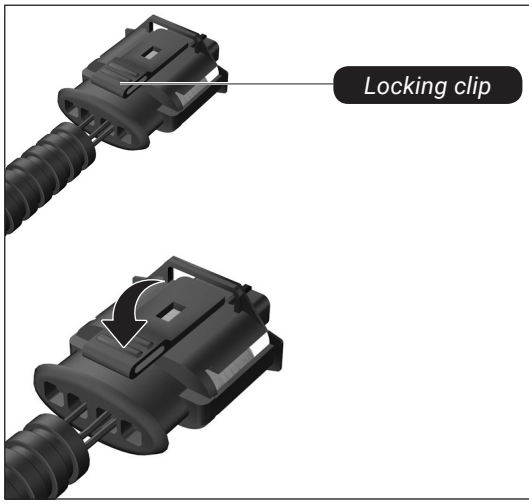

The plugs are locked into the connection sockets by means of a ***locking clip***. Press the ***locking clip*** and pull the plug.

Because the plug is often connected very tightly to the socket, it is helpful, when pressing the ***locking clip***, to first push the plug towards the connection socket before subsequently pulling on it.

In addition, temperature fluctuations in the engine bay can result in a type of “vacuum effect” between the plug and the socket. This can be solved by lightly “wiggling” the plug.

Detaching the connector correctly

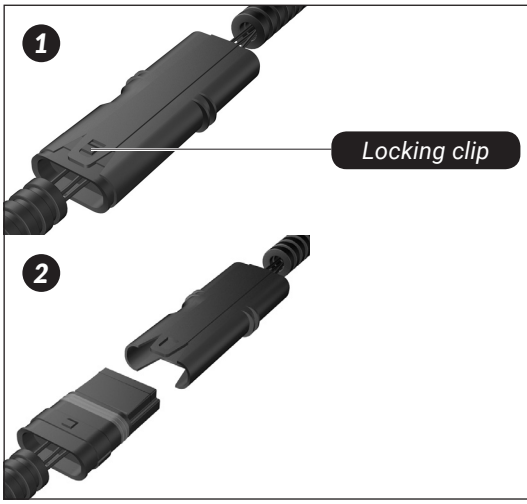

The plugs are locked into the connection sockets by means of a ***locking clip***. Pull slightly the ***locking clip*** and pull the plug.

Because the plug is often connected very tightly to the socket, it is helpful, when pressing the ***locking clip***, to first push the plug towards the connection socket before subsequently pulling on it.

In addition, temperature fluctuations in the engine bay can result in a type of “vacuum effect” between the plug and the socket. This can be solved by lightly “wiggling” the plug.

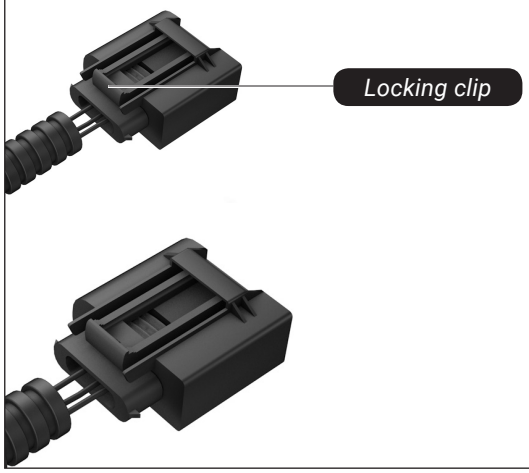

The plugs are locked into the connection sockets by means of a ***locking clip***. Press the locking clip and pull the plug.

Because the plug is often connected very tightly to the socket, it is helpful, when pressing the ***locking clip***, to first push the plug towards the connection socket before subsequently pulling on it.

In addition, temperature fluctuations in the engine bay can result in a type of “vacuum effect” between the plug and the socket. This can be solved by lightly “wiggling” the plug.

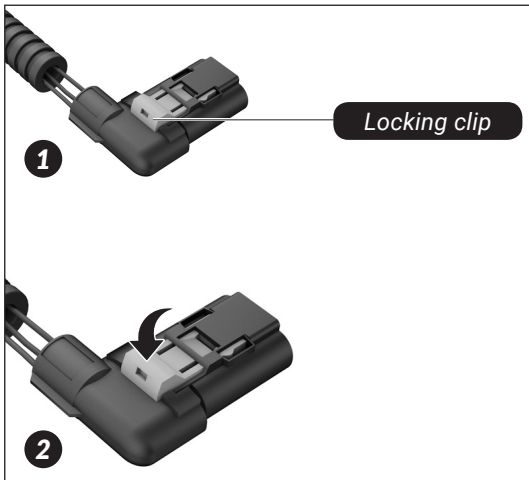

In the first step, the orange ***locking clip*** is pulled out. Press the orange ***locking clip***, which functions as a lever for loosening the plug and pulling it out.

Because the plug is often connected very tightly to the socket, it is helpful, when pressing the ***locking clip***, to first push the plug towards the connection socket before subsequently pulling on it.

In addition, temperature fluctuations in the engine bay can result in a type of “vacuum effect” between the plug and the socket. This can be solved by lightly “wiggling” the plug.

Detaching the connector correctly



The plugs are locked into the connection sockets by means of a ***locking clip***. Press the ***locking clip*** and pull the plug.

Because the plug is often connected very tightly to the socket, it is helpful, when pressing the ***locking clip***, to first push the plug towards the connection socket before subsequently pulling on it.

In addition, temperature fluctuations in the engine bay can result in a type of “vacuum effect” between the plug and the socket. This can be solved by lightly “wiggling” the plug.

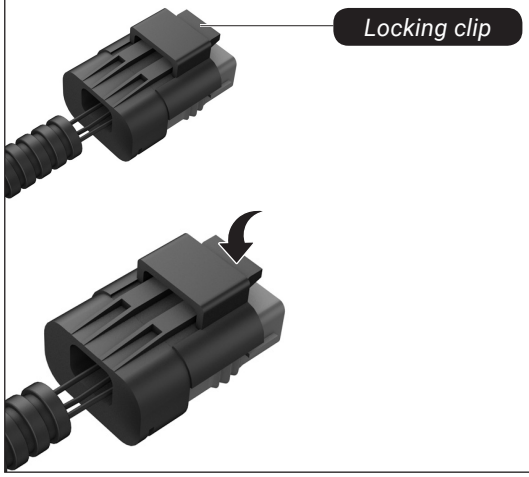

The plugs are locked into the connection sockets by means of a ***locking clip***. Press the ***locking clip*** and pull the plug.

Because the plug is often connected very tightly to the socket, it is helpful, when pressing the ***locking clip***, to first push the plug towards the connection socket before subsequently pulling on it.

In addition, temperature fluctuations in the engine bay can result in a type of “vacuum effect” between the plug and the socket. This can be solved by lightly “wiggling” the plug.

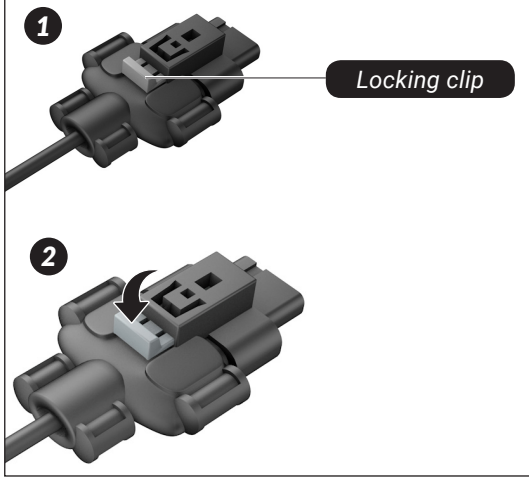

The first step involves pulling out the bright grey ***locking clip***. Press down on the bright grey ***locking clip***, which serves as a switch for releasing and removing the plug.

Because the plug is often connected very tightly to the socket, it is helpful, when pressing the ***locking clip***, to first push the plug towards the connection socket before subsequently pulling on in.

In addition, temperature fluctuations in the engine bay can result in a type of “vacuum effect” between the plug and the socket. This can be solved by lightly “wiggling” the plug.