PLEASE READ BEFORE STARTING INSTALLATION

RACE CHIP

APP-CONTROL



Download the new RaceChip+ app

Download on the App Store

bit.ly/RCplus-iOS

GET IT ON Google Play

bit.ly/RCplus-android

XLR 5

User Manual

BMW Z4 (E85-86) M Roadster

Contents

1 Scope of delivery *3*

2 Installation *4*

3 Trouble Shooting *12*

4 Contact *16*

Overview and explanation of symbols

⚠ **Warnings** and important information – please read!

i **General information** on installation and use

Tips to assist installation and use

1 Scope of delivery



*The **Brainbox***

Specifically modified to suit your car.

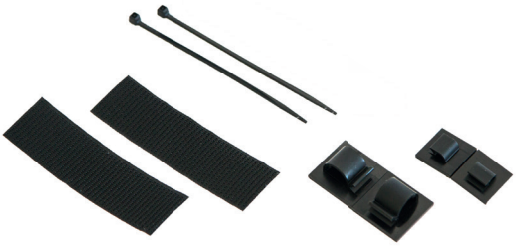

Fasteners

Material to fix the Brainbox in place.

2 Installation

Step 1 of 6 – Preparation

1. Open the driver's door as far as possible.

2. Remove any mats and move the driver's seat all the way back.

3. Switch the ignition off, remove the key.

4. Ensure the footwell is properly illuminated with an inspection lamp.

5. Wait about **10 minutes** before starting ***Step 2***, as all current consumers must have switched themselves off.

2 Installation

Step 2 of 6 – Disconnect throttle pedal sensor

There are two types of throttle pedal: **floor-mounted** or **hanging**. We'll explain how to disconnect the throttle pedal sensor for both types.

A. Floor-mounted throttle pedal

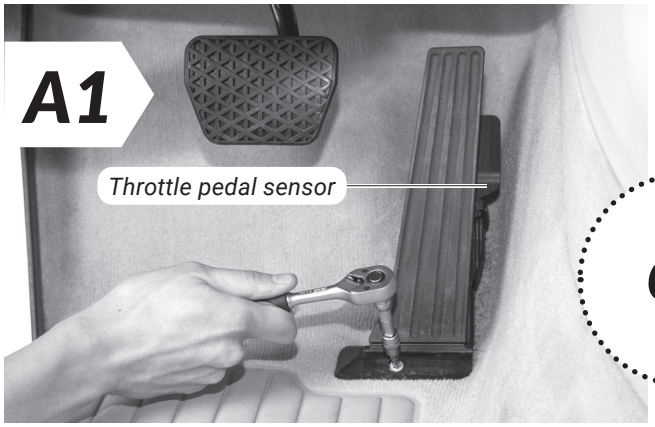

- Disassemble the throttle pedal with the appropriate tools.

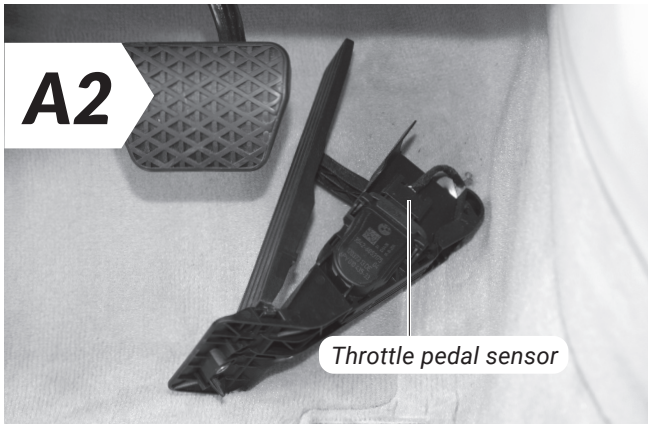

- The throttle pedal sensor is on the right-hand side of the throttle pedal. Carefully pull off the connector of the throttle pedal sensor.

OR

B. Hanging throttle pedal

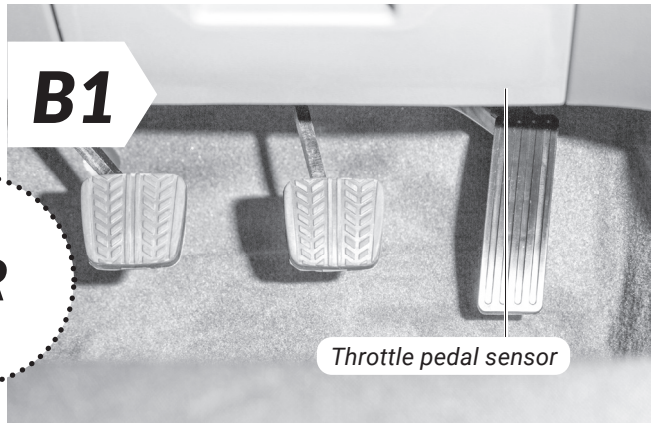

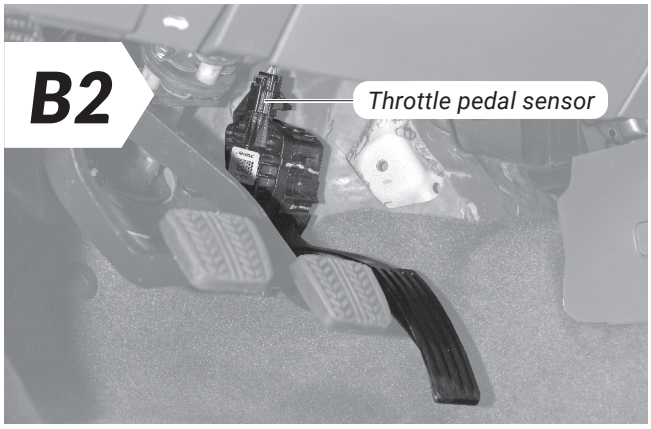

- The throttle pedal sensor is at the top of the throttle pedal. Carefully pull off the connector of the throttle pedal sensor.

i	You might have to remove part of the trim to get to the connector.

	If you need assistance in detaching the throttle pedal sensor connector: see the additional instructions **"Detaching the connector correctly".**

2 Installation

Step 3 of 6 – Connect the Brainbox

The car used to illustrate these instructions is for demonstration purposes only. The basic procedure is exactly the same even if the details of your car look different.

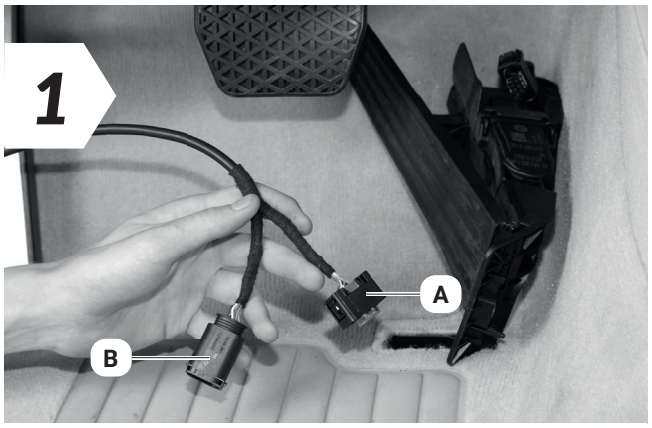

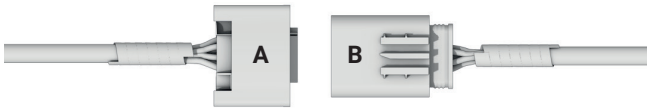

- The cable leading from the Brainbox has two connectors (marked **A** and **B**).

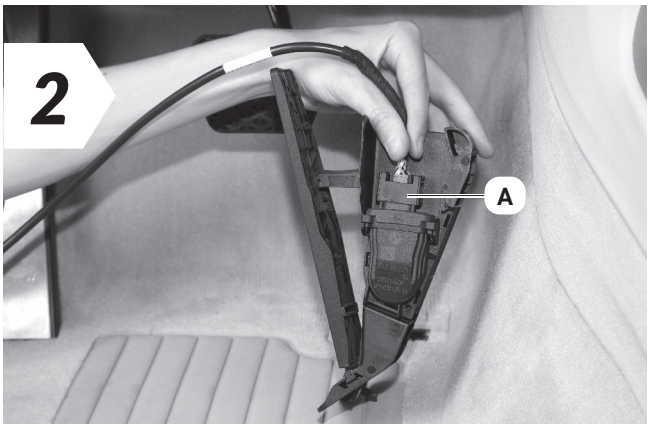

- Attach connector **A** from the Brainbox to the gas pedal sensor.

> ⚠ **A sharp click indicates that the retaining clip has engaged fully.**

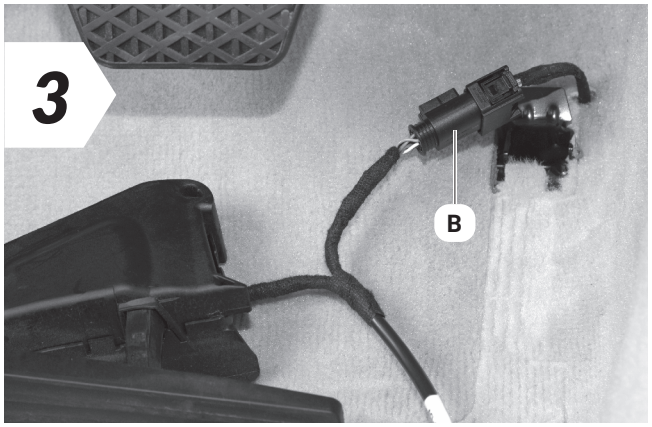

- Now attach connector **B** to the connector you pulled off the gas pedal.

> ⚠ **A sharp click indicates that the retaining clip has engaged fully.**

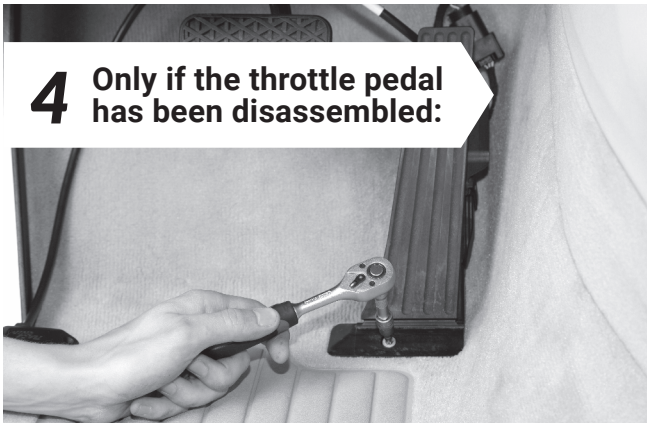

- Re-assemble the throttle pedal.
- Make sure the cable is not trapped and does not interfere with the pedals.
- Ensure the throttle pedal is firmly fixed in the proper position.

2 Installation

Step 4 of 6 – Fix the Brainbox

We recommend two places for fixing the Brainbox (although there may be other possibilities):

A. On the left of the footwell next to the footrest.

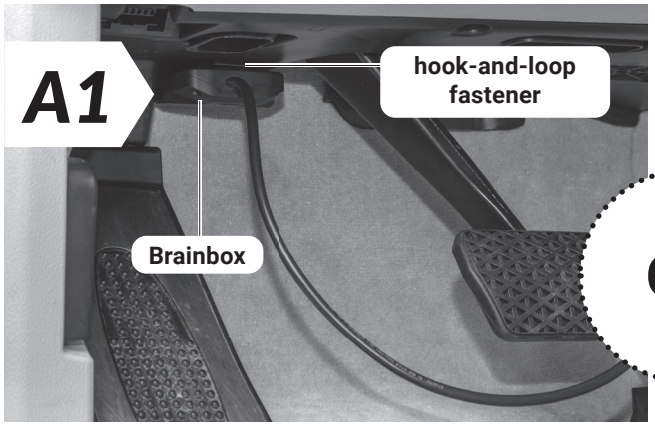

1x hook-and-loop fastener



- Fix one part of the hook-and-eye fastener tape to the bottom of the Brainbox.
- Fix the other part of the fastener tape to the site indicated in the footwell. Make sure the site is free of dust and grease first.
- Now press the two halves of the fastener together (see picture for Brainbox position).

OR

B. Under the trim on the centre tunnel

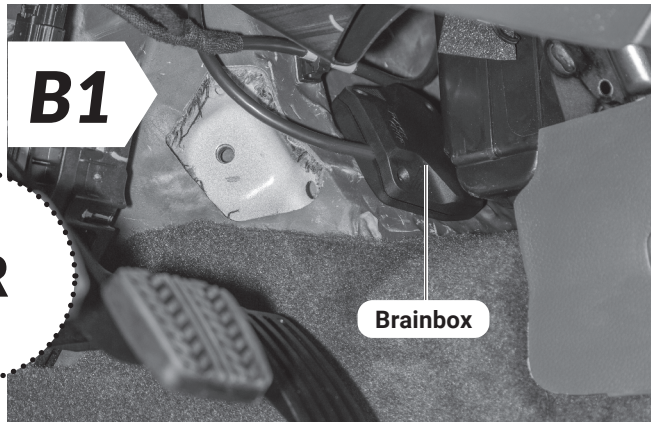

- First test carefully to see if the Brainbox will fit under the trim.
- If the Brainbox fits, slide it carefully under the trim into the position shown.

⚠ **Secure the Brainbox and its wiring so that they do not interfere with the pedals and cannot slide into the footwell.**

2 Installation

A. On the left of the footwell next to the footrest

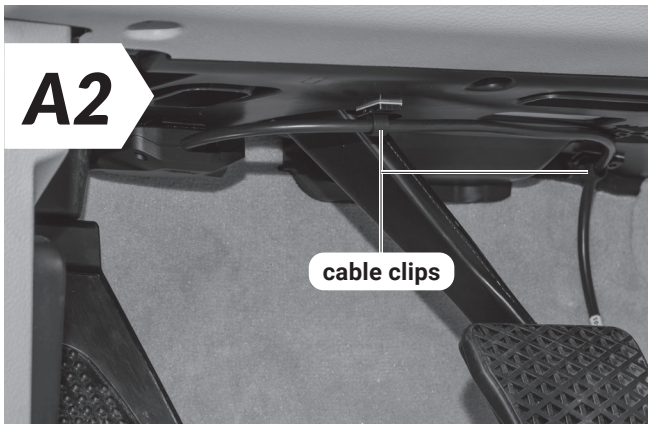

B. Under the trim on the centre tunnel

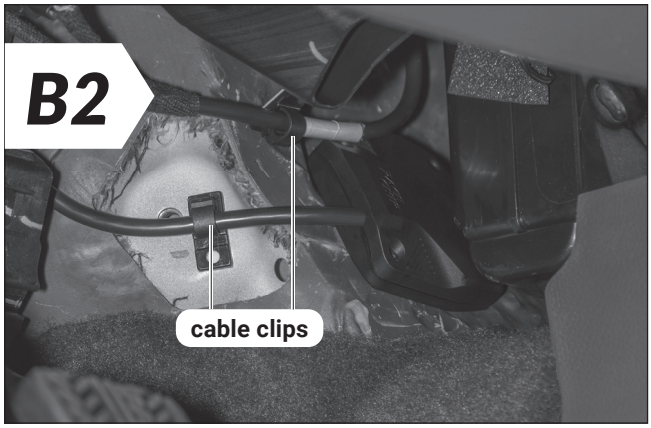

2x cable clips

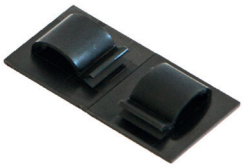

2x cable ties



- Use the cable clips and/or cable ties to secure the cable between the Brainbox and the throttle pedal, ensuring that nothing interferes with the pedals.

2 Installation

Step 5 of 6 – Pair RaceChip XLR5 with your smartphone

According to your operating system (**Android** and **Apple**), the steps for connecting the RaceChip and your smartphone may vary. Please find the most important steps below. In general, you should follow the instructions given by your smartphone for the connection.

i

- The connection between the RaceChip and your smartphone is set up in the last step of the installation process.
- The RaceChip is fully functional even if there is no connection to a smartphone running the RaceChip+ app.
- The RaceChip XLR5 is now in the factory setting **SPORT** after first pairing.

1 Download the free **RaceChip+** app.

GET IT ON Google Play

Download on the App Store

2 Switch on the ignition of your car. **Do not** start the engine.

3 Activate the Bluetooth function of your smartphone.

4 Open the RaceChip+ app.

5 With opening the RaceChip+ app for the first time, the installation dialogue for chip tuning by RaceChip is shown. Touch **ADD PRODUCT** and follow the instructions given by your smartphone.



2 Installation

6 You can enter the serial number by hand (touch **MANUALLY**) or with the QR code scanner of the camera (touch). Confirm the entry with **NEXT**.

The 13-digit serial number is located on the backcover of the brainbox. The Bluetooth PIN consists of the last 6 digits of the serial number.

Example:

1234567 891234

Bluetooth-PIN

Serial number

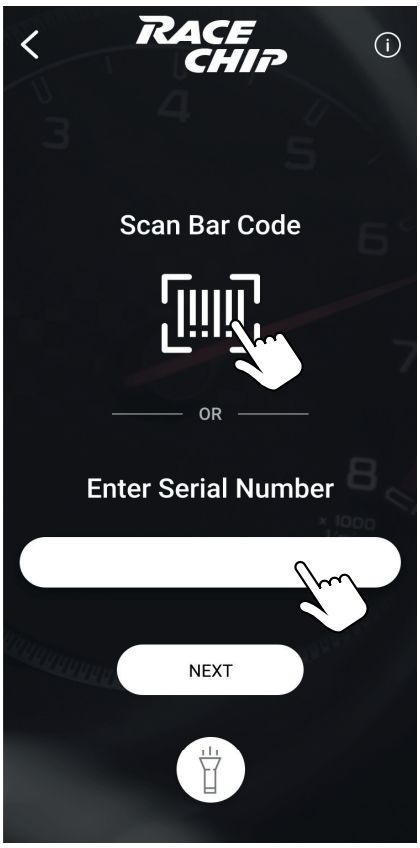

Having trouble with connecting RaceChip XLR5 and your phone's Bluetooth?
Follow these steps one by one until the pairing is complete:

1. Check that the car's ignition is switched on.
2. Check that the Bluetooth function on your smartphone is fully activated.
3. Deactivate and then re-activate the Bluetooth connection. Check if RaceChip and your phone will pair now.
4. Re-start the RaceChip+ app.
5. Go to your smartphone's settings and view all discoverable Bluetooth devices. If your RaceChip (**RC XLR**) is not visible, please contact our customer service.

7 As soon as the connection is set up, the app installation is completed.

2 Installation

Step 6 of 6 - Calibrate throttle pedal

After the connection, the throttle pedal must be calibrated. Please follow the instructions in the app:

1. Turn on the ignition (**do not start the engine**)
2. Do not press the throttle pedal pedal
3. Select minimum calibration in the app
4. When minimum is successfully calibrated, fully depress the throttle pedal. If there is a kickdown, activate it as well and hold it in this position.
5. Select maximum calibration in the app
6. After calibration is complete, release the throttle pedal
7. Calibration is complete.

i

- If the calibration is not performed successfully, not all functions of the RaceChip XLR5 are available.
- We therefore recommend to calibrate the RaceChip XLR5 directly after installation.

3 Trouble Shooting

If your RaceChip XLR5 doesn't function as it should, here are some trouble shooting tips.

Description of problem	What to do
Check engine warning light  (also preheat warning light on diesel engines ) remains on after installation	• Switch off the engine and remove the key. Check that all connectors are engaged. • If the problem persists after restarting the engine, contact our Customer Service.
No/poor throttle response, or engine responds with interruptions	• De-install the Brainbox of RaceChip XLR5. • Return your car to stock tuning by reconnecting the stock pedal sensor directly with the throttle pedal. • Check the throttle response, with the car stationary at first and then on an empty road. If the throttle response is still bad or patchy, we recommend not driving the car. The problem is probably not caused by RaceChip XLR5 but by a malfunction in a component in the throttle pedal.
Car is jerky at constant throttle	• First check to see if the jerkiness occurs in all tuning stages or only certain ones. • When you have done this, please contact our Customer Service and give us as much detail as possible. We can help you much better if you give us precise information. • Please do not activate RaceChip XLR5 in your car until we have found a solution.
Automatic gearbox changes gear jerkily No pairing between	• First check to see if the jerkiness occurs in all tuning stages or only in certain ones. • When you have done this, please contact our Customer Service and give us as much detail as possible. We can help you much better if you give us precise information. • Move your car only with deactivated RaceChip XLR5 until the problem is solved.

3 Trouble Shooting

Description of problem	What to do
Revs too high at idle running	• Please de-install the Brainbox of RaceChip XLR5. • Return your car to stock tuning by reconnecting the stock pedal sensor directly with the throttle pedal. • Check the revs at idle running again. If they are still too high, we recommend not driving the car. The problem is probably not caused by RaceChip XLR5 but by a malfunction of a component in the throttle pedal. • Please contact our Customer Service. Based on the information you give us, we will help to find a solution and tell you whether you need to take your car to a specialist.
Car does not start	• Switch off the ignition and remove the key. Check that all the connectors are securely engaged. • Please make a note of this information and contact our Customer Service. • If the problem occurs when you first install RaceChip XLR5, please de-install the Brainbox completely. There may be a problem in the system caused by residual current in the throttle pedal when you unplugged it. To reset the system, lock the car and leave it for at least 30 minutes before trying to start it again. If the engine still does not start, the car's fault memory must be reset (any professional garage or repair shop can do this). Once this has been done, you can repeat the Brainbox installation. Make sure that the ignition is off and that you wait at least 10 minutes before disconnecting the throttle pedal.
Connectors do not fit or do not click securely into place	• Check that you are trying to connect the correct pair of connectors and that they are correctly aligned. • The connectors should fit together easily – don't force them. • If the connectors are incompatible, please take a picture of the connector on the throttle pedal in your car and contact our Customer Service.

3 Trouble Shooting

Description of problem	What to do
The response is the same as in stock condition. (a sudden loss of the Bluetooth connection may be an indication of this error).	• RaceChip XLR5 detected a problem with signal transmission and went into its safe mode. • This also disables the pairing between the RaceChip+ App and your smartphone. As long as the safe mode is enabled, no tuning modes can be selected using the RaceChip+ App. • This means your car is now in stock tune and can be driven. However, we recommend that you do not ignore the problem for a long period. • Please contact our Customer Service. • If the problem did not occur immediately after you installed RaceChip XLR5, it could be caused by a malfunction in the throttle pedal or in another related assembly (i.e. RaceChip is not the cause). In this case, please take the car to a specialist workshop.
No pairing between RaceChip App and RaceChip XLR5 possible after updates of the operating system on your smartphone	• Shut down the RaceChip+ App (iOS: iOS: push the home button twice and close the RaceChip+ App; Android: Open the task manager and close the RaceChip+ App) and re-start it again. • Please contact our Customer Service if the issue still exists.

3 Trouble Shooting

Trouble Shooting	What to do
No pairing between RaceChip+ App and RaceChip XLR5 possible	• - Check that the Bluetooth function on your smartphone is fully activated. - Deactivate and then re-activate the Bluetooth connection. Check if RaceChip XLR5 and your phone will pair now. - Deactivate the Bluetooth connection and completely shut down the RaceChip+ App (iOS: push the home button twice and close the RaceChip+ App; Android: Open the task manager and close the RaceChip+ App). Activate the Bluetooth connection and open the RaceChip+ App again. - Go to your smartphone's settings and view all discoverable Bluetooth devices. Select "RaceChip XLR" to pair your smartphone with the RaceChip XLR5. In case no connection is established, delete "RaceChip XLR" from the list of discoverable Bluetooth devices. Try pairing again. - Re-start the installation dialogue of the RaceChip+ App. Make sure you have entered the correct Bluetooth pin (see Step 4 of the Installation). - Please contact our Customer Service if the issue still exists. • Case 2 (functionality and installation issue): - Switch off the ignition of your car and remove the key (follow Step 1 of the Installation). - Check that all connectors are engaged and that the installation (see Installation) has been completed correctly. - Please shut down the RaceChip+ App on your smartphone now (iOS: push the home button twice and close the RaceChip+ App; Android: Open the task manager and close the RaceChip+ App)

4 Contact



Our Customer Service is ready to help!

Find out how to contact us at:
www.racechip.com/service-support

Please have your customer details close by when you contact us.

Follow us on:

/racechipchiptuning

@racechipchiptuning

Legal notice

RaceChip Chiptuning GmbH & Co. KG
Karl-Frasch-Str. 14
73037 Göppingen
Germany

Sales tax identification number: DE 260672432
Registered at District Court of Ulm: HRA 721734
Tax number: 63079/11153

Personally liable partner:
RaceChip Chiptuning Verwaltungs GmbH
Chief executives: Dirk Bongardt, Kai Döhler
Head office: Karl-Frasch-Str. 14, 73037 Göppingen, Germany
Registered at HRB District Court of Ulm: HRB 724254

Detaching the connector correctly

Connector number CL-X-0101

1

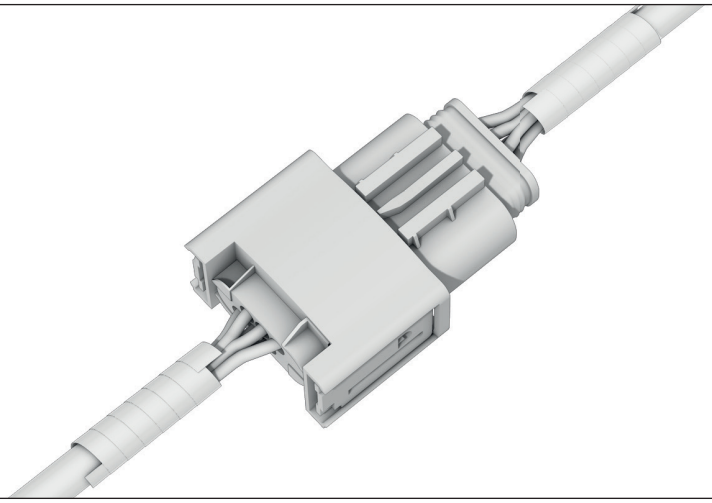

2

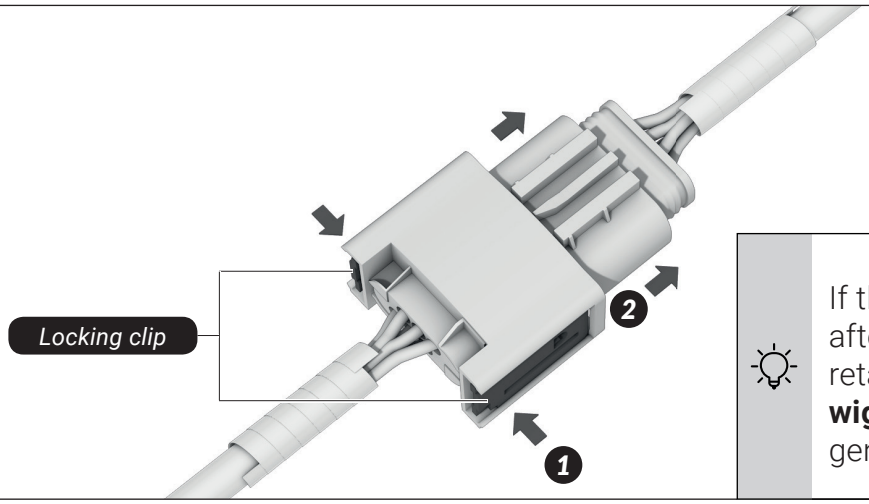

If the connector still sticks after you have released the retaining clip, you can **wiggle** the connector gently as you pull it.

3

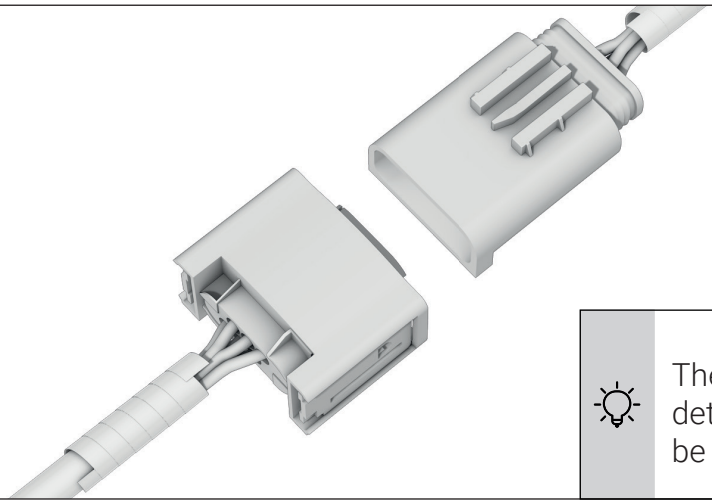

The connector should detach without needing to be forced too much.

Detaching the connector correctly

Connector number CL-X-0201, CL-X-2201

1

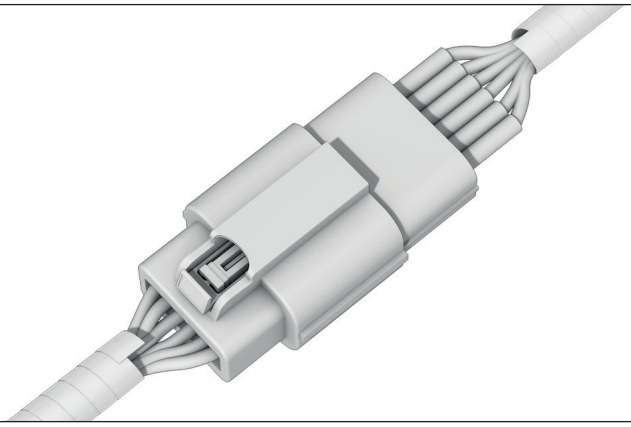

2

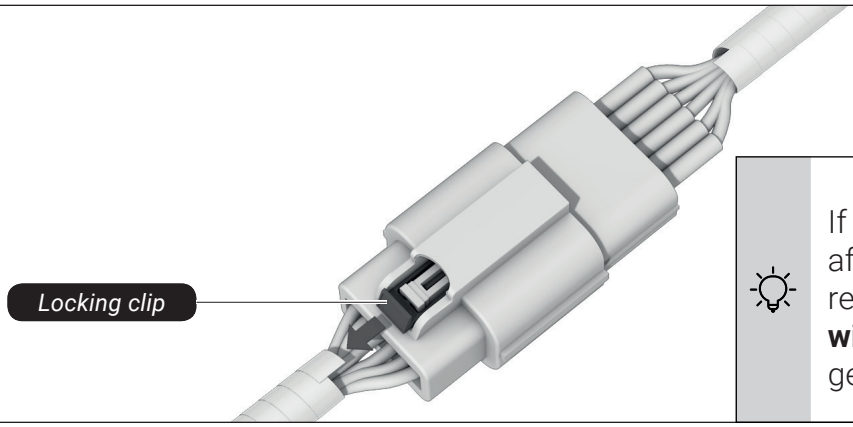

If the connector still sticks after you have released the retaining clip, you can **wiggle** the connector gently as you pull it.

3

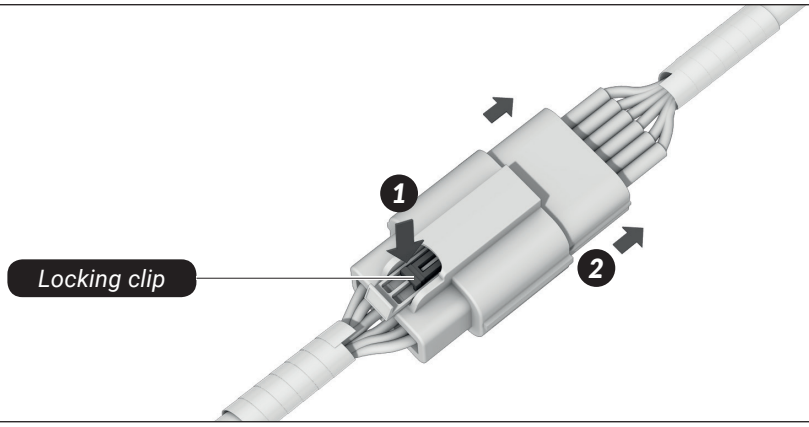

4

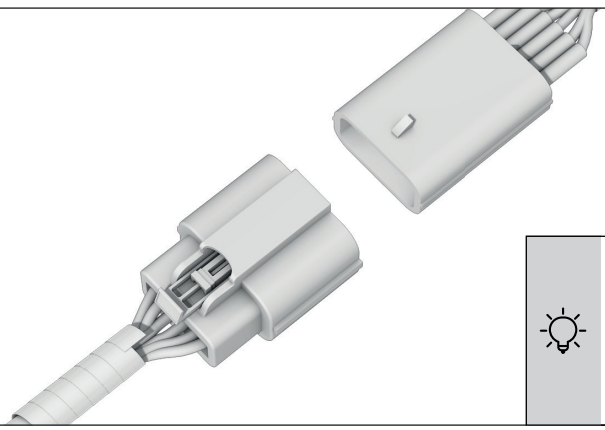

The connector should detach without needing to be forced too much.

Detaching the connector correctly

Connector number CL-X-0301, CL-X-1201, CL-X-2801, CL-X-3101

1

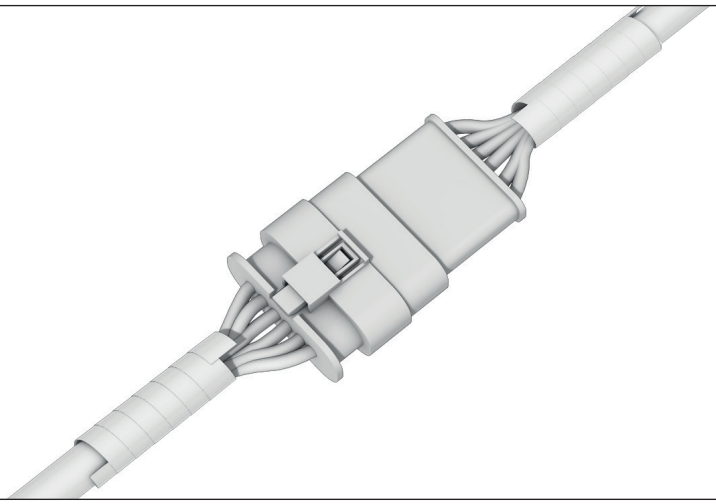

2

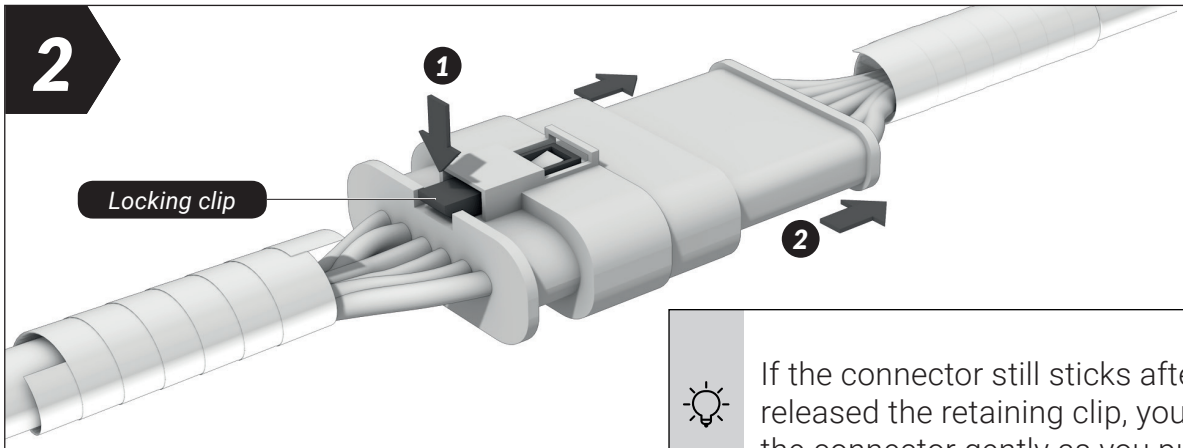

If the connector still sticks after you have released the retaining clip, you can wiggle the connector gently as you pull it.

3

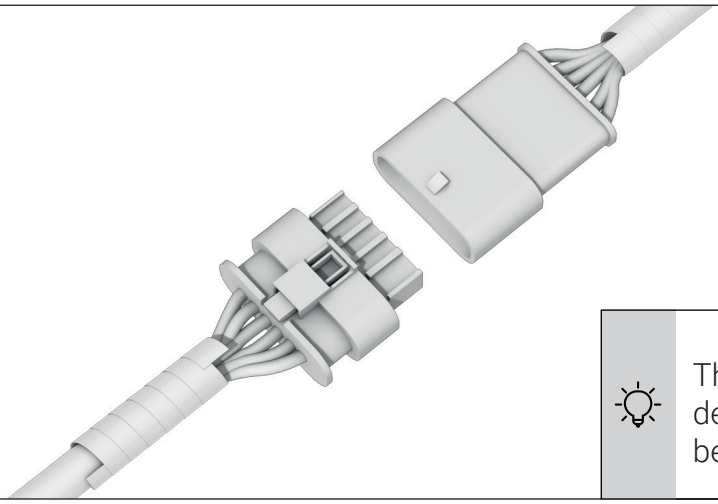

The connector should detach without needing to be forced too much.

Detaching the connector correctly

Connector number CL-X-0401, CL-X-1301, CL-X-2701

1

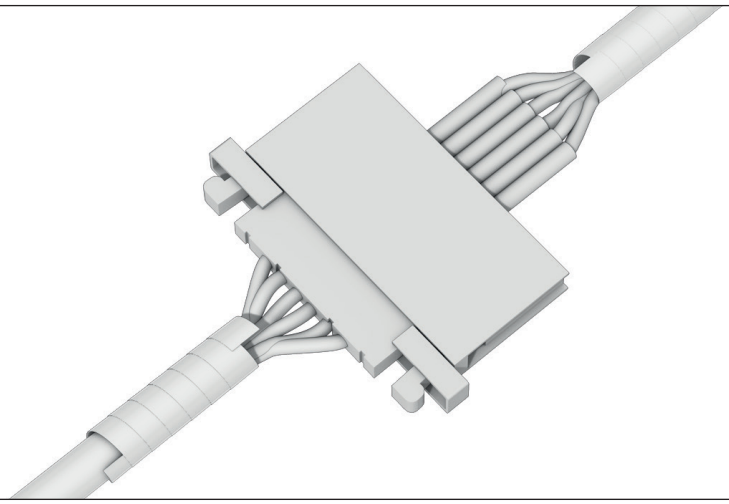

2

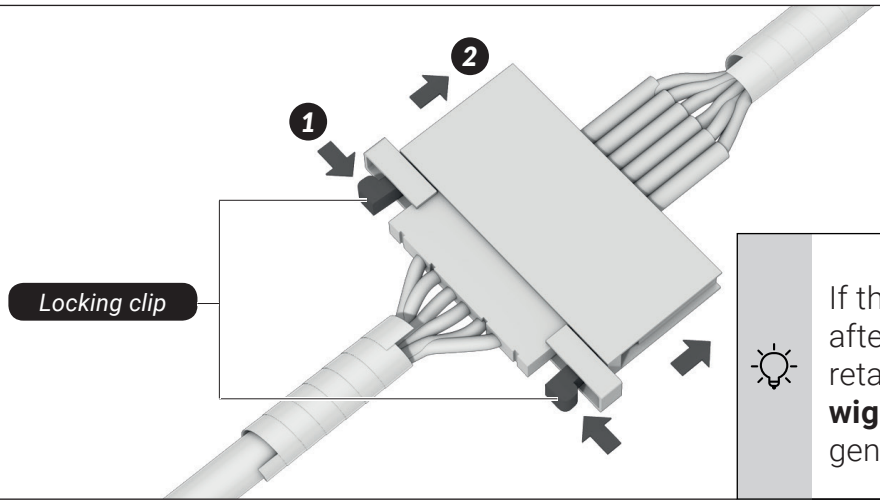

If the connector still sticks after you have released the retaining clip, you can **wiggle** the connector gently as you pull it.

3

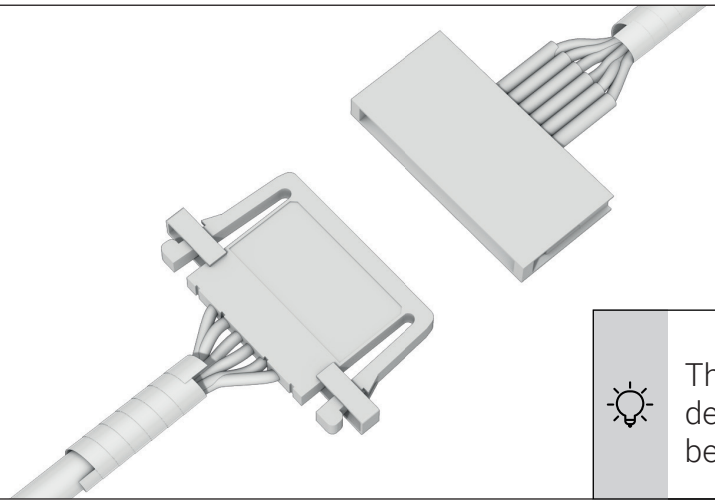

The connector should detach without needing to be forced too much.

Detaching the connector correctly

Connector number CL-X-0501

1

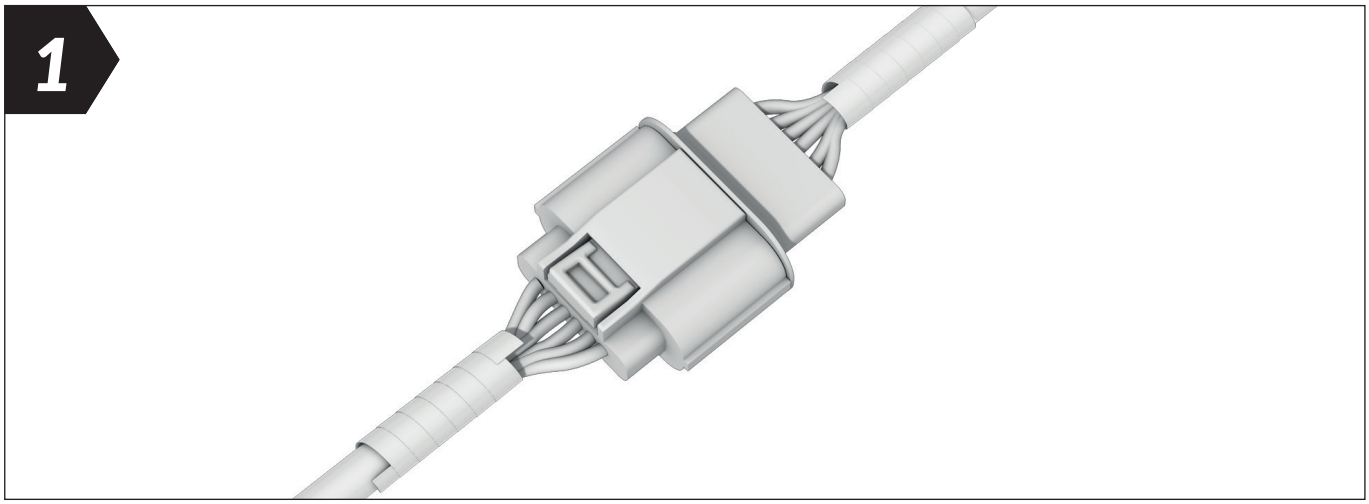

2

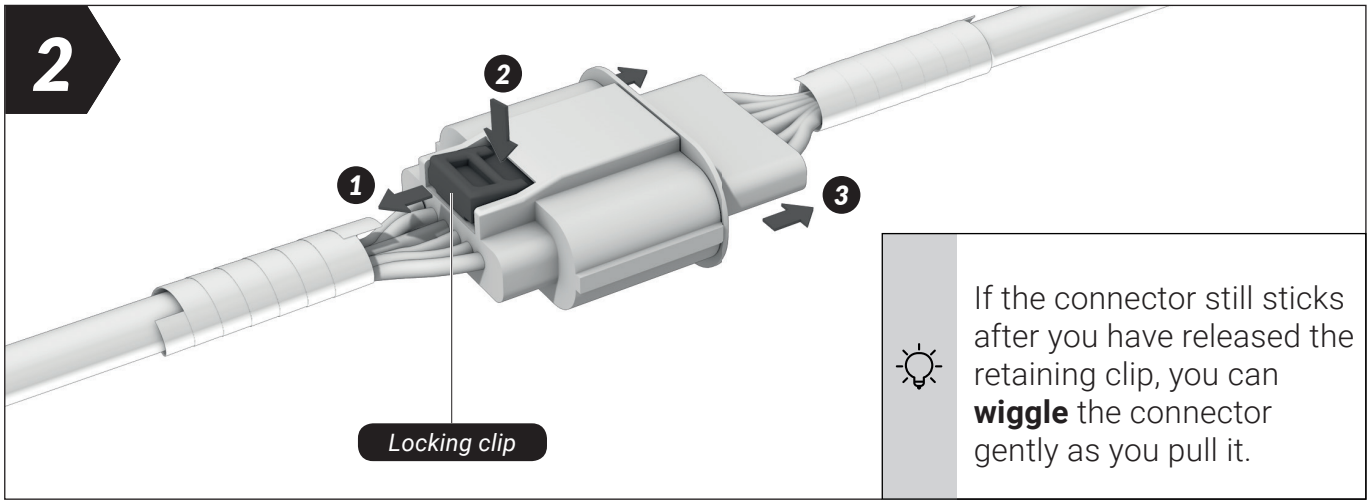

If the connector still sticks after you have released the retaining clip, you can **wiggle** the connector gently as you pull it.

3

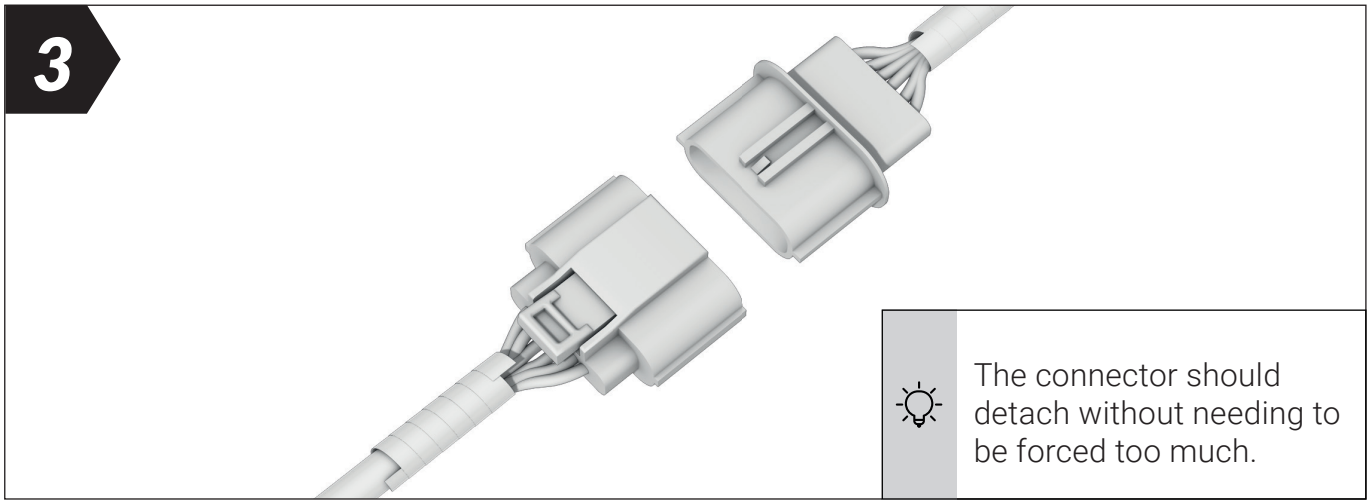

The connector should detach without needing to be forced too much.

Detaching the connector correctly

Connector number CL-X-0701, CL-X-2301, CL-X-3201

1

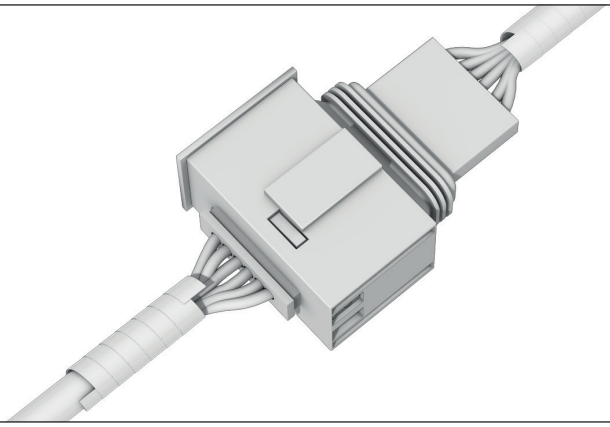

2

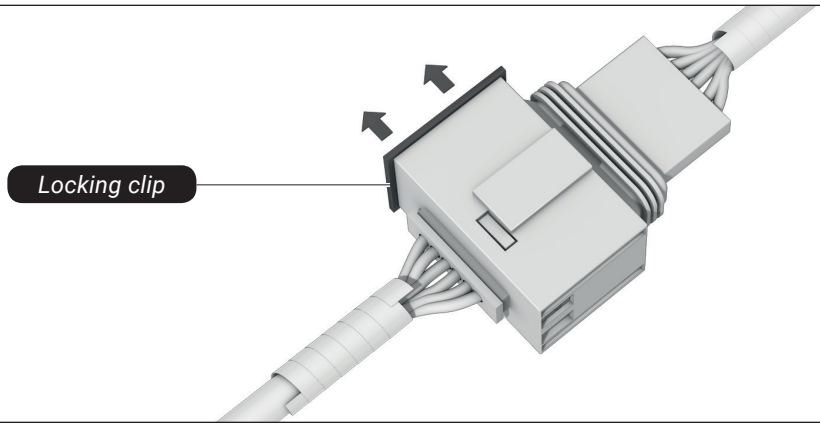

3

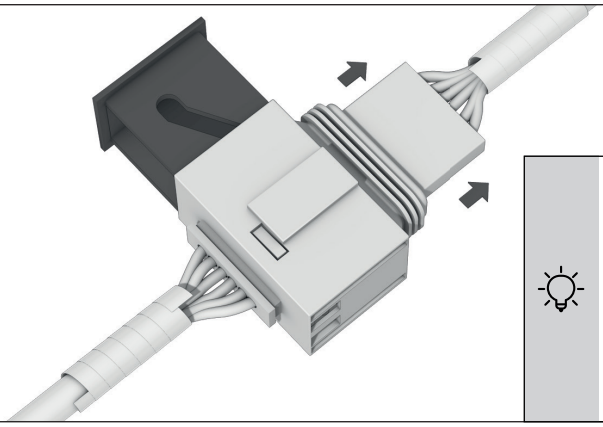

If the connector still sticks after you have released the retaining clip, you can **wiggle** the connector gently as you pull it.

4

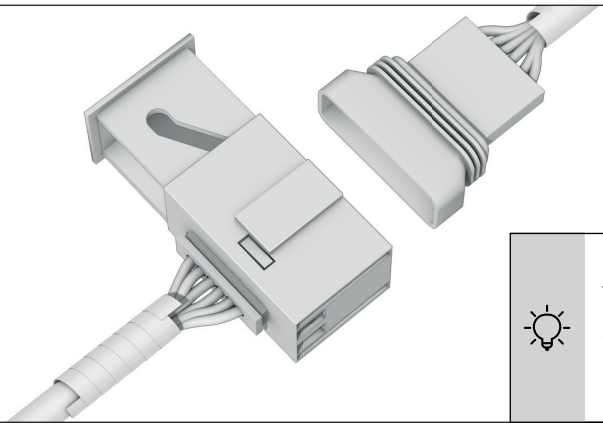

The connector should detach without needing to be forced too much.

Detaching the connector correctly

Connector number CL-X-0801

1

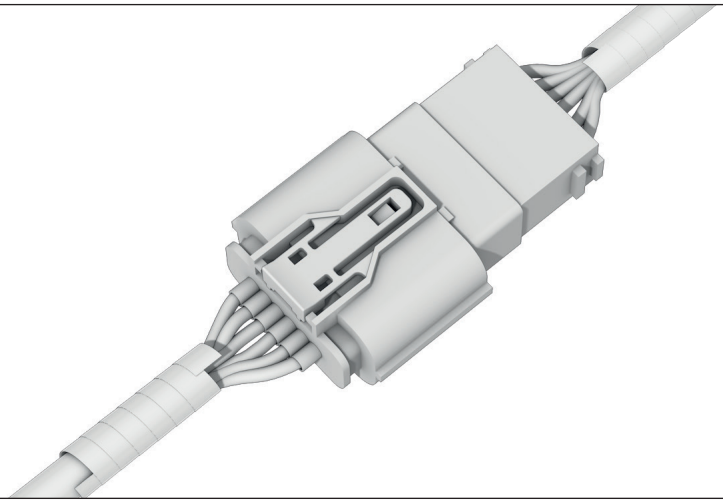

2

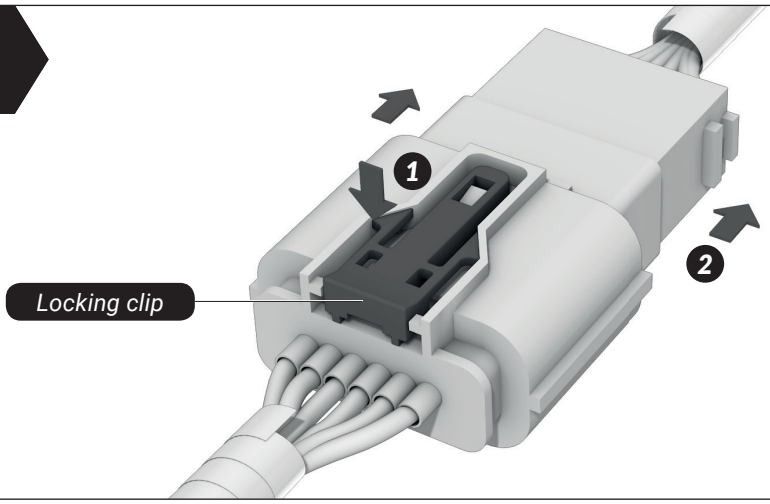

If the connector still sticks after you have released the retaining clip, you can **wiggle** the connector gently as you pull it.

3

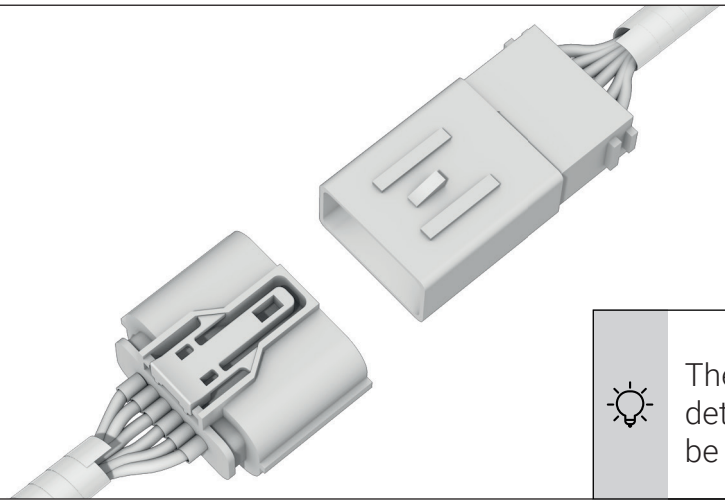

The connector should detach without needing to be forced too much.

Detaching the connector correctly

Connector number CL-X-0901-1501

1

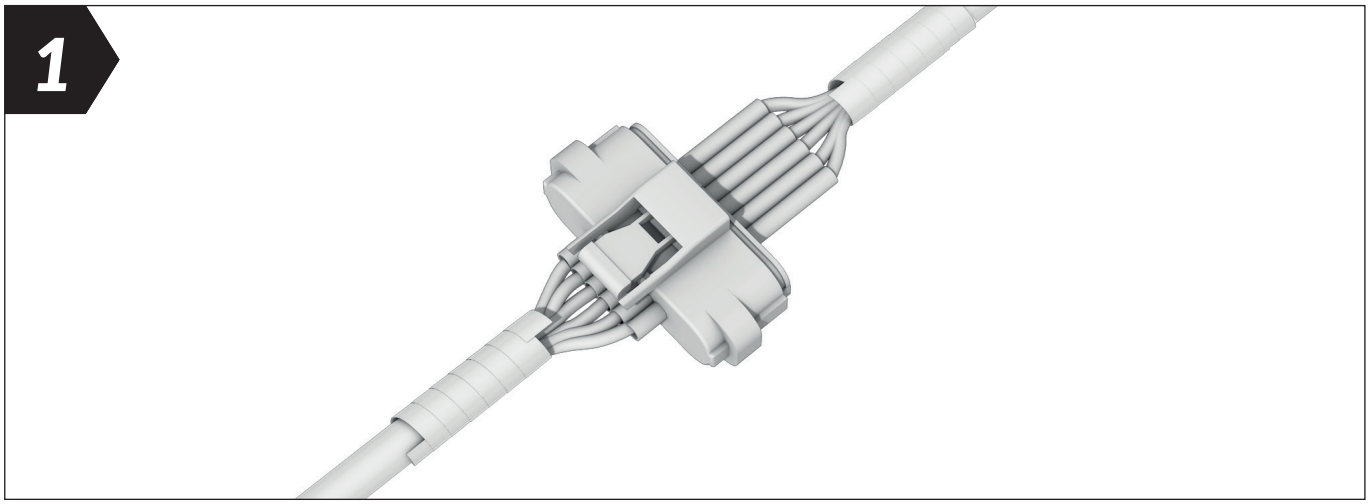

2

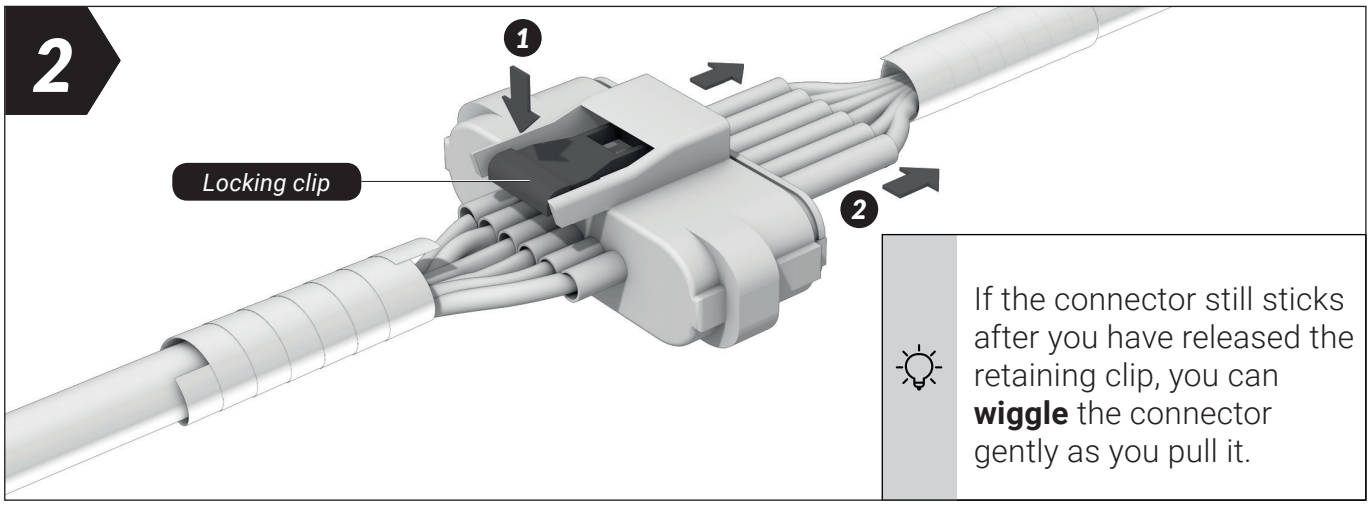

If the connector still sticks after you have released the retaining clip, you can **wiggle** the connector gently as you pull it.

3

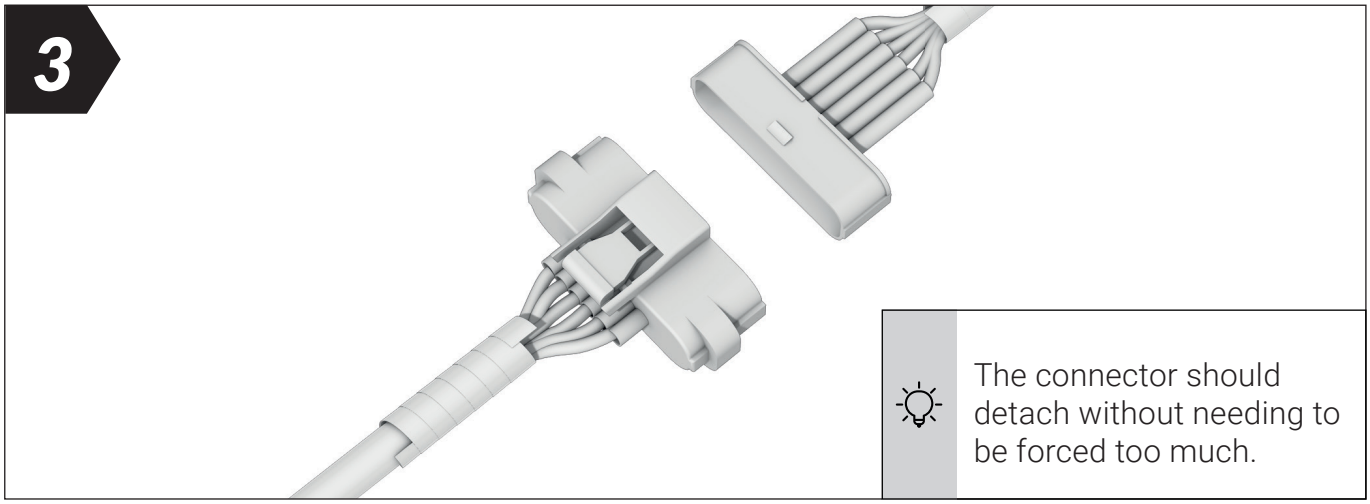

The connector should detach without needing to be forced too much.

Detaching the connector correctly

Connector number CL-X-1001, CL-X-2101, CL-X-2401, CL-X-3001

1

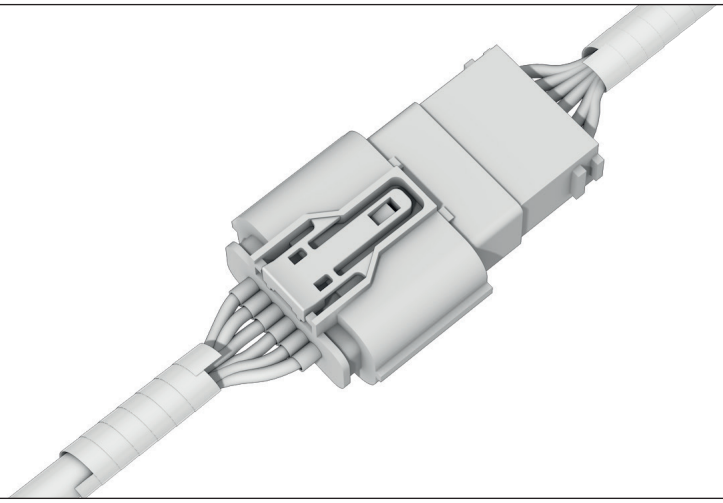

2

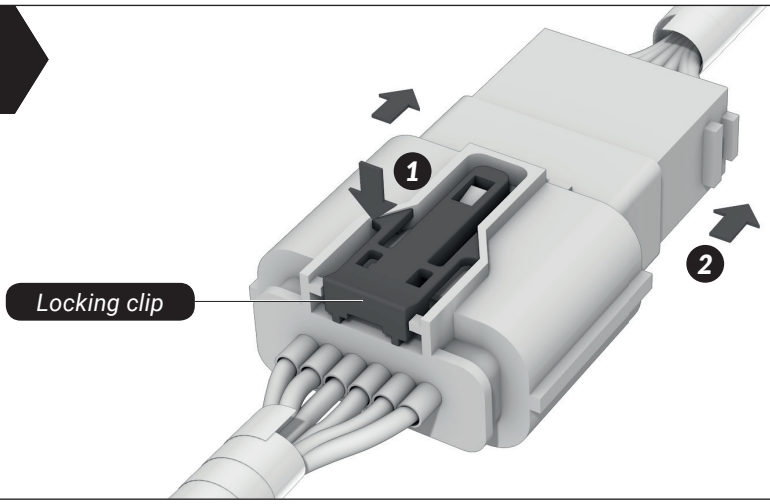

If the connector still sticks after you have released the retaining clip, you can **wiggle** the connector gently as you pull it.

3

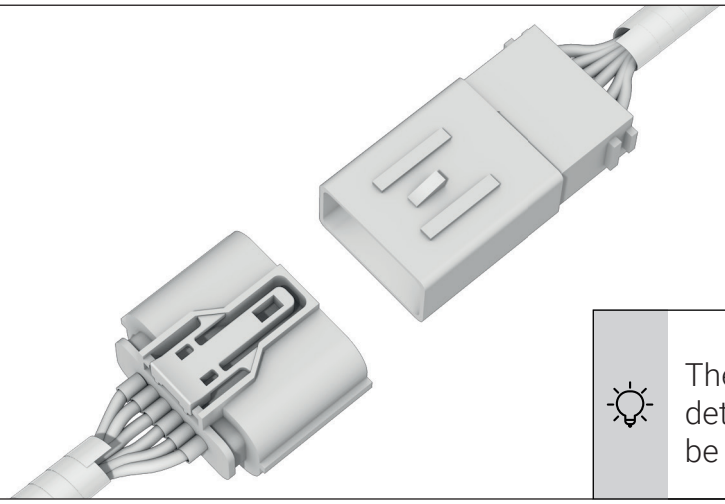

The connector should detach without needing to be forced too much.

Detaching the connector correctly

Connector number CL-X-1101

1

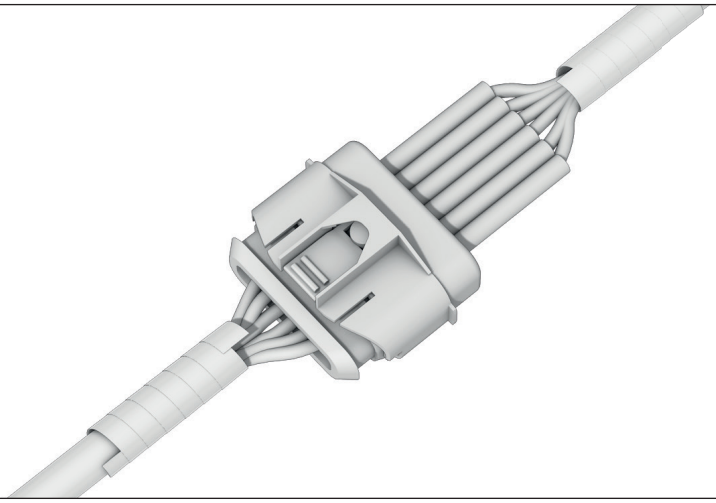

2

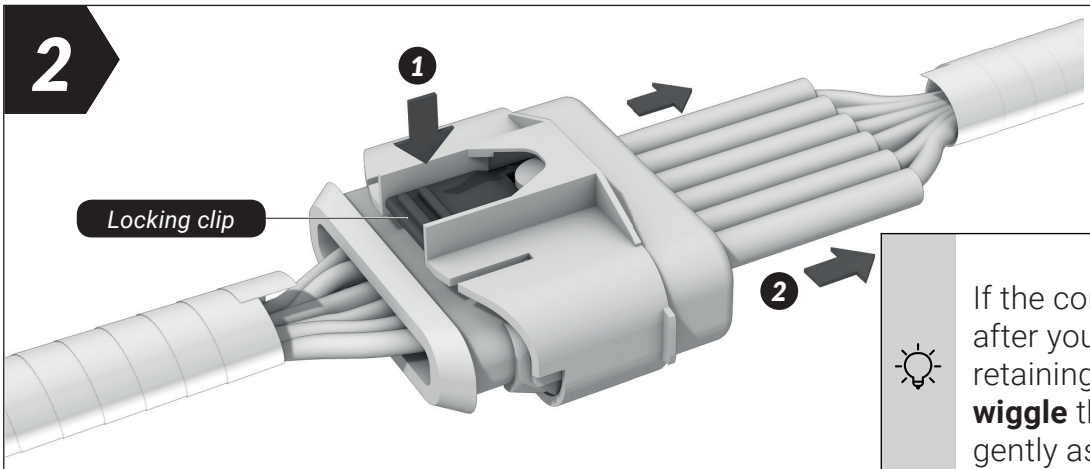

If the connector still sticks after you have released the retaining clip, you can **wiggle** the connector gently as you pull it.

3

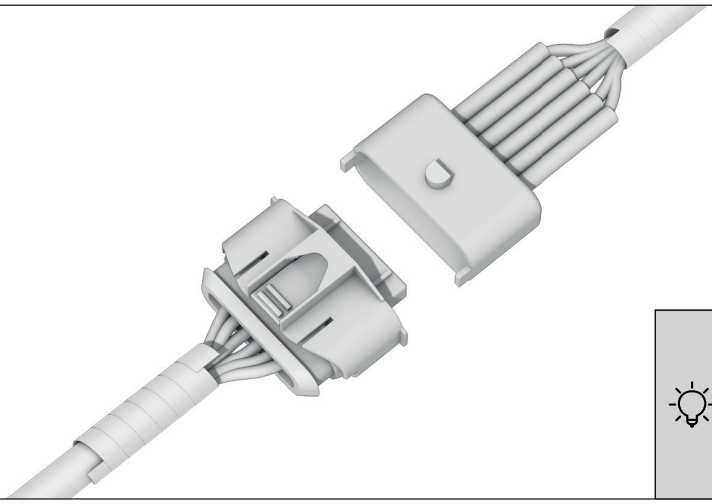

The connector should detach without needing to be forced too much.

Detaching the connector correctly

Connector number CL-X-1401, CL-X-1801

1

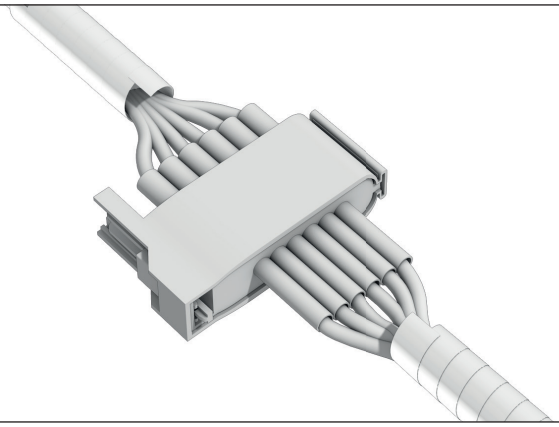

2

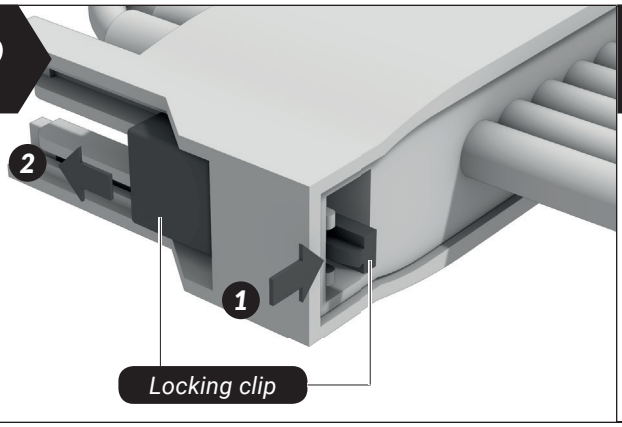

3

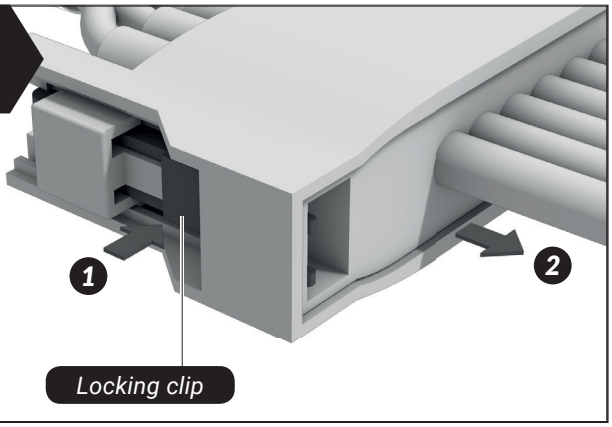

4

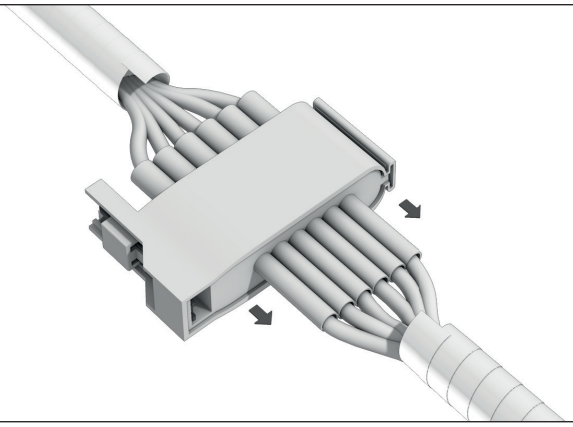

If the connector still sticks after you have released the retaining clip, you can **wiggle** the connector gently as you pull it.

5

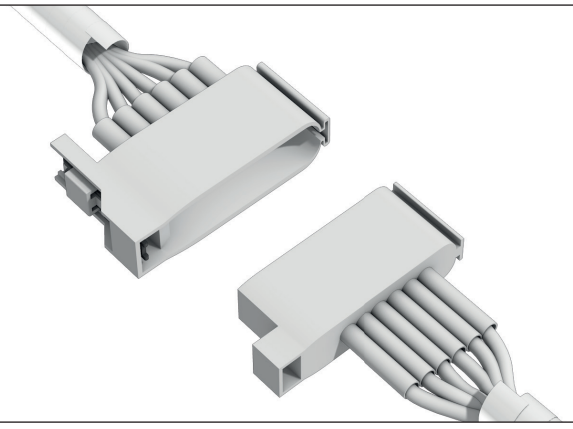

The connector should detach without needing to be forced too much.

Detaching the connector correctly

Connector number CL-X-1601

1

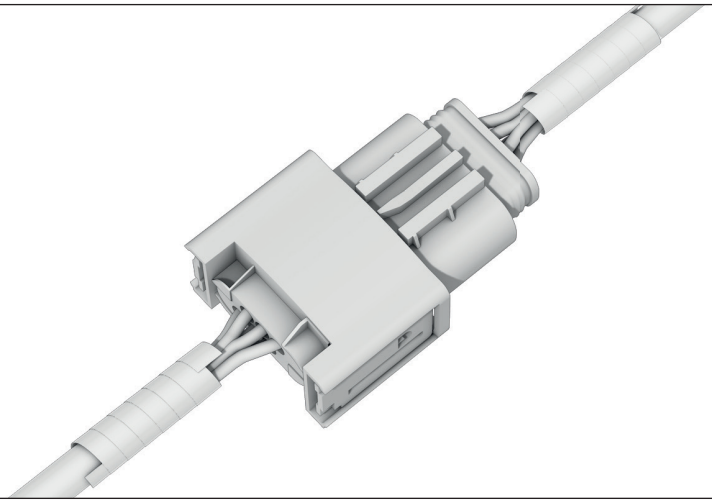

2

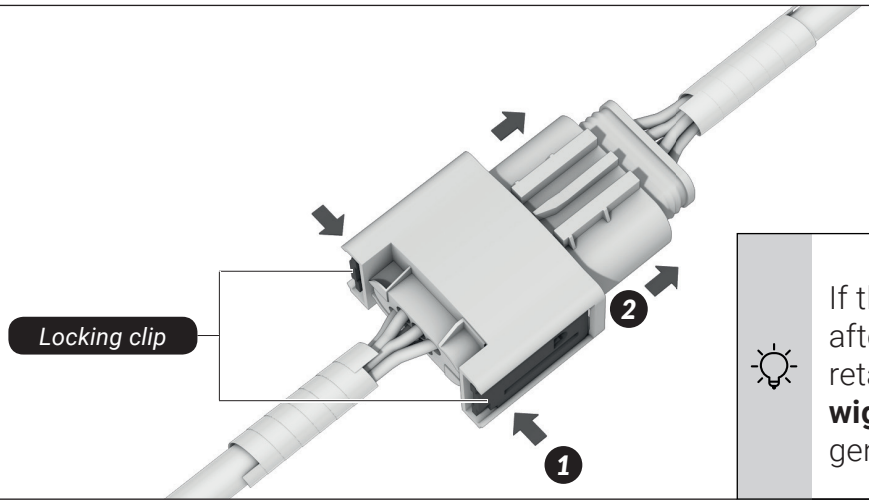

If the connector still sticks after you have released the retaining clip, you can **wiggle** the connector gently as you pull it.

3

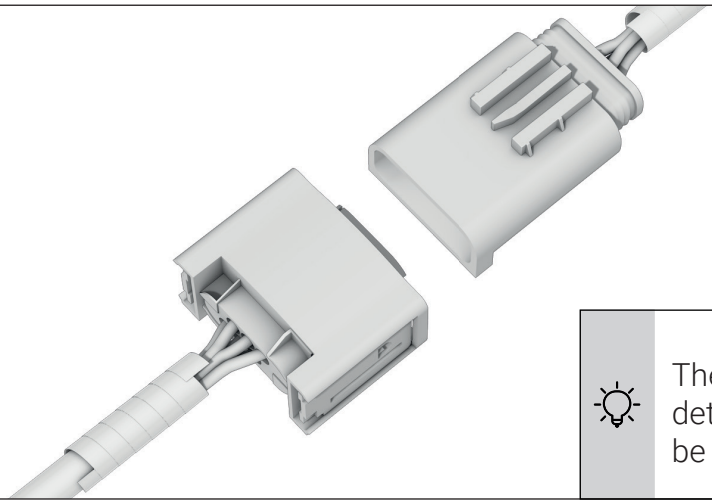

The connector should detach without needing to be forced too much.

Detaching the connector correctly

Connector number CL-X-1701

1

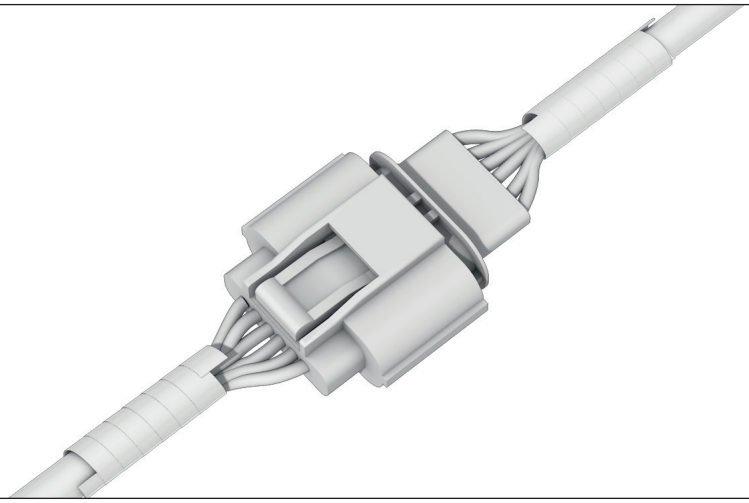

2

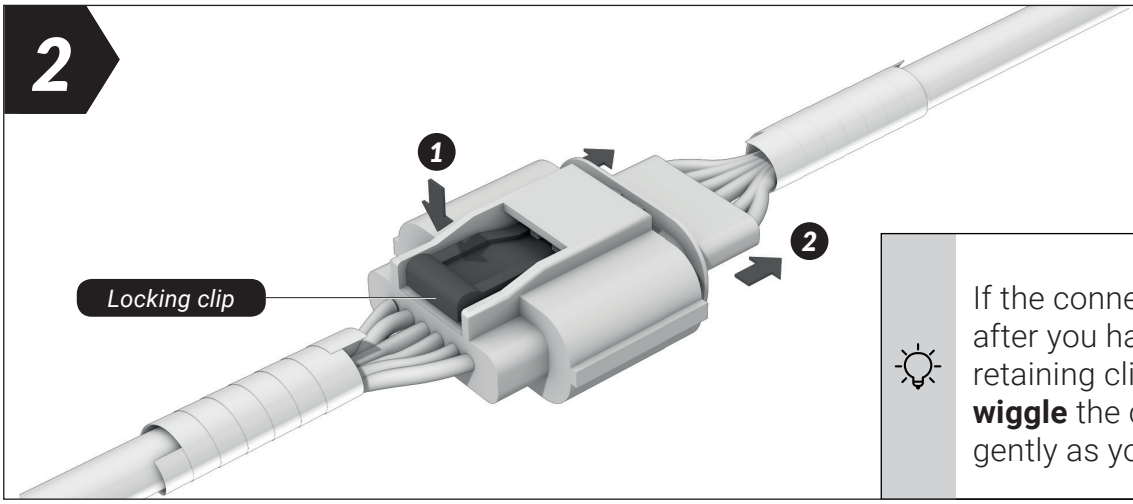

If the connector still sticks after you have released the retaining clip, you can **wiggle** the connector gently as you pull it.

3

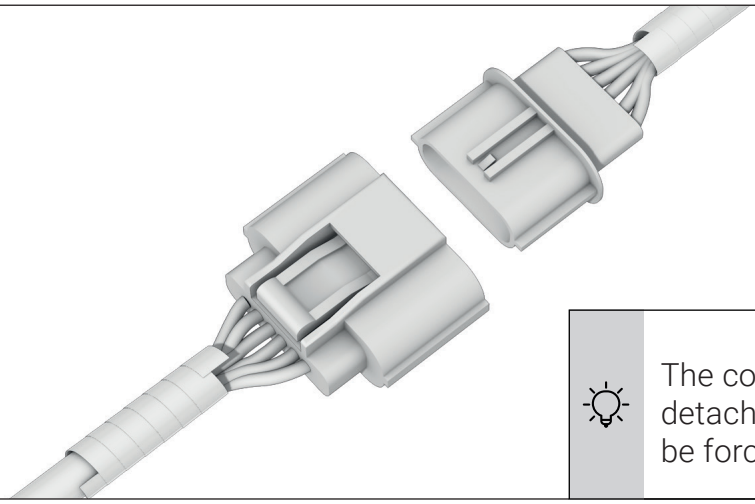

The connector should detach without needing to be forced too much.

Detaching the connector correctly

Connector number CL-X-1901

1

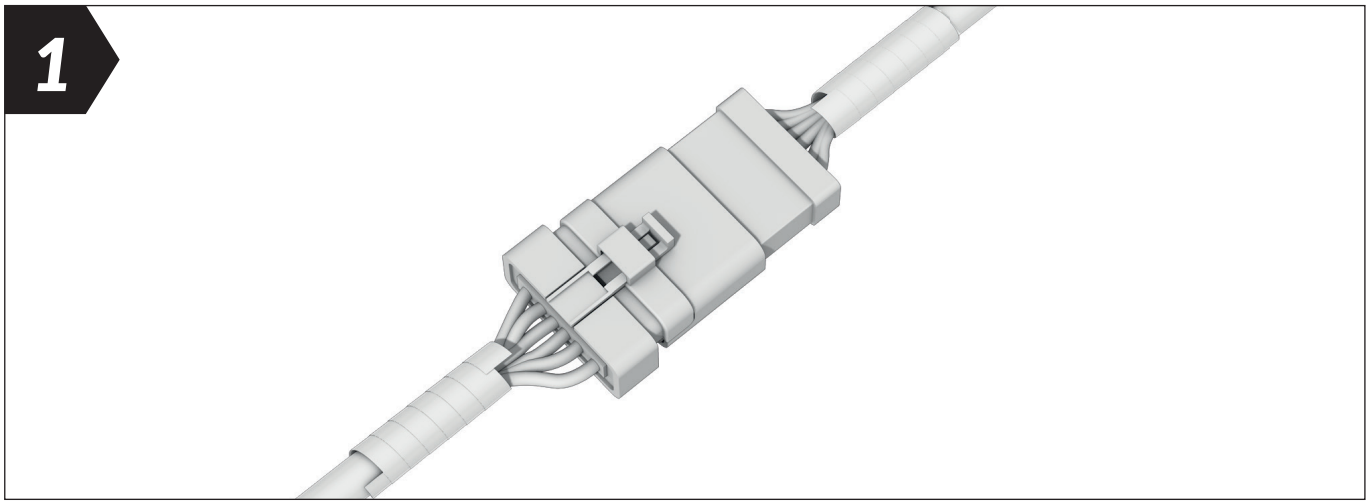

2

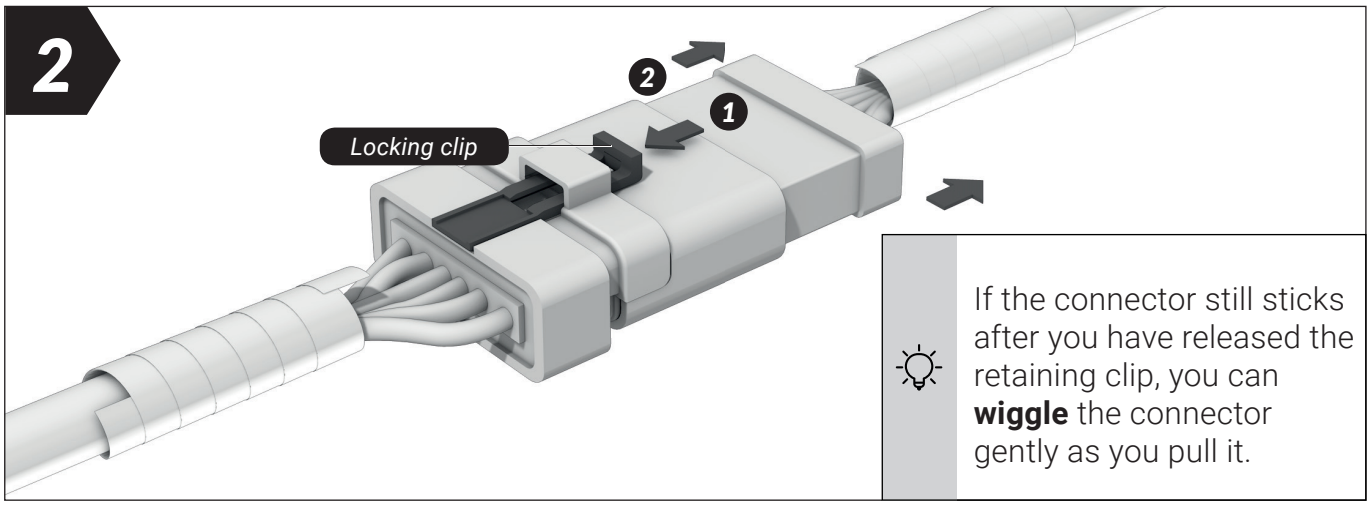

If the connector still sticks after you have released the retaining clip, you can **wiggle** the connector gently as you pull it.

3

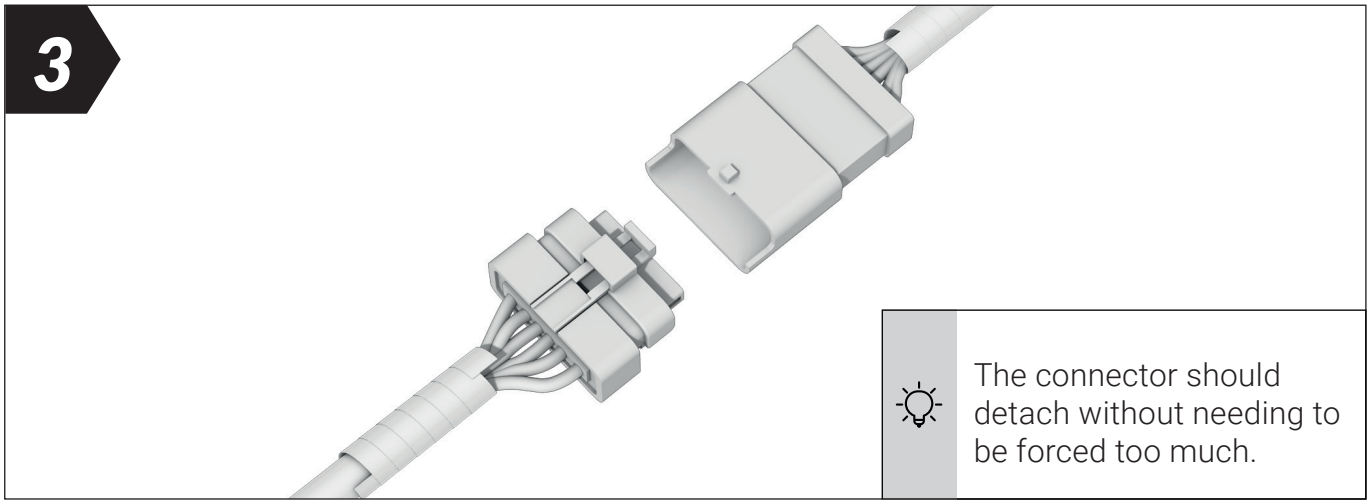

The connector should detach without needing to be forced too much.

Detaching the connector correctly

Connector number CL-X-2001, CL-X-2601

1

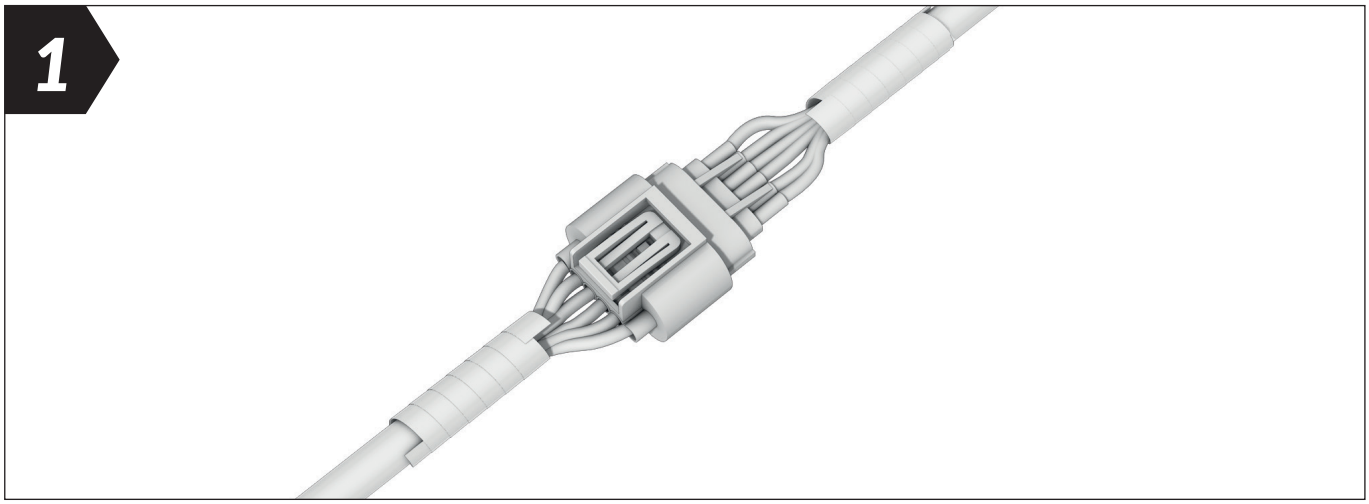

2

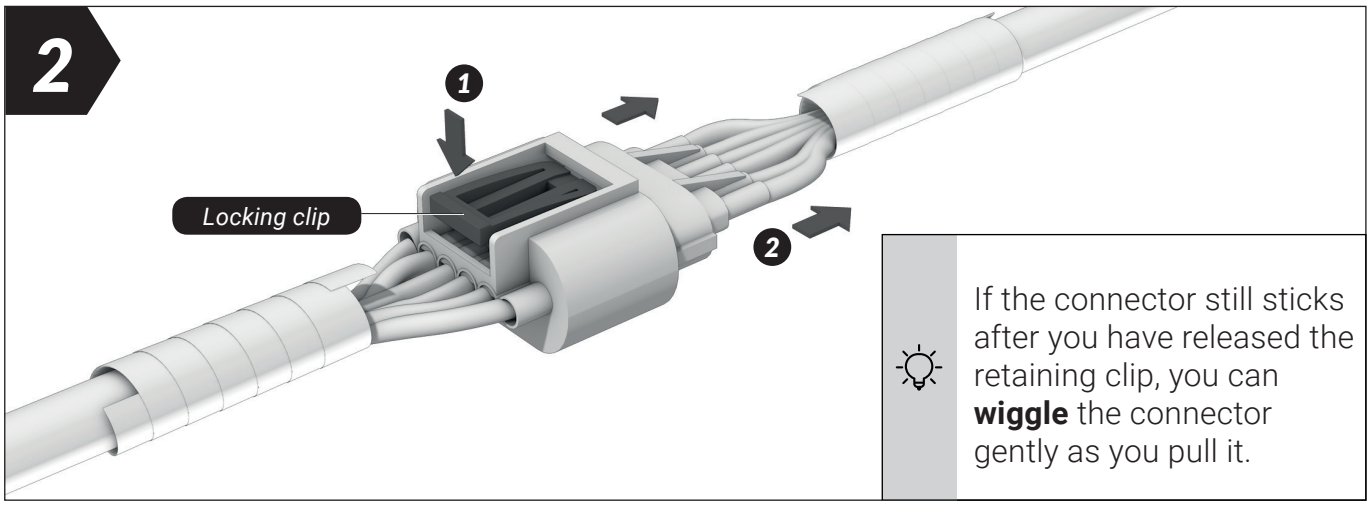

If the connector still sticks after you have released the retaining clip, you can **wiggle** the connector gently as you pull it.

3

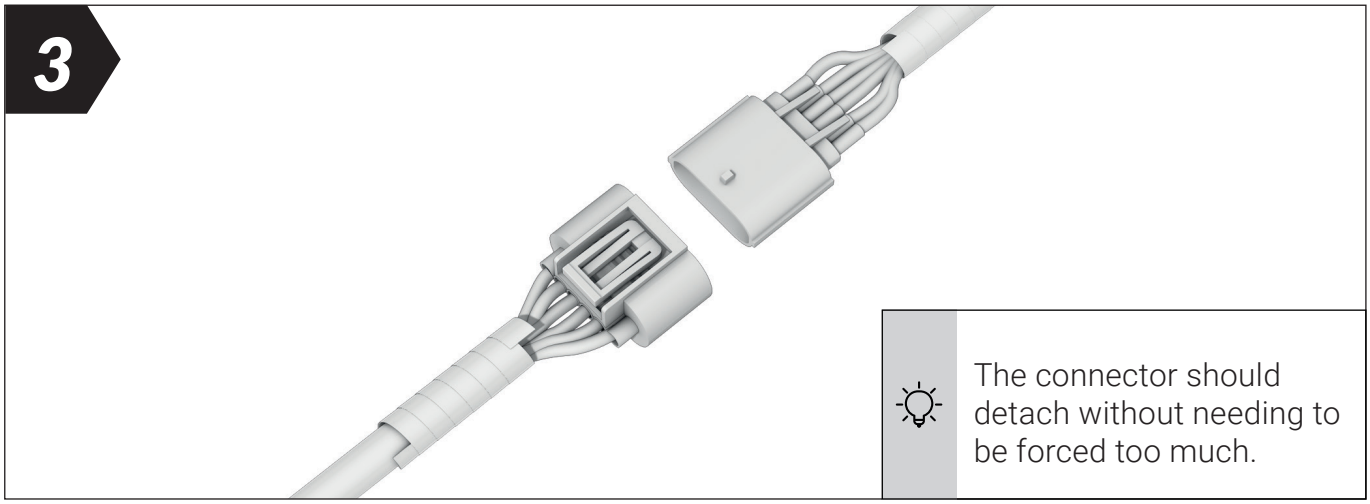

The connector should detach without needing to be forced too much.

Detaching the connector correctly

Connector number CL-X-2501

1

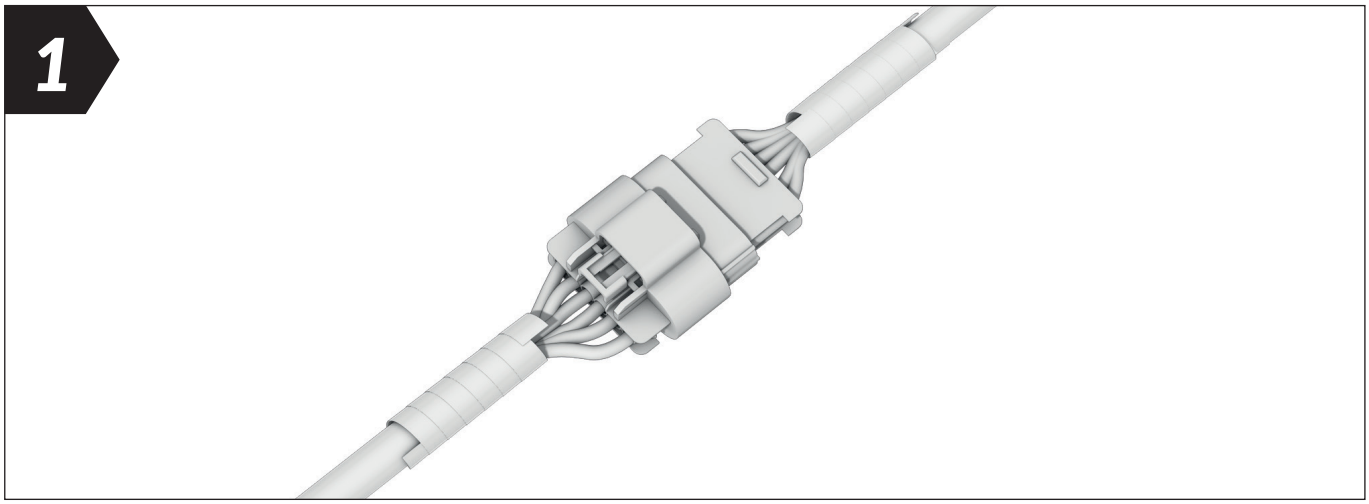

2

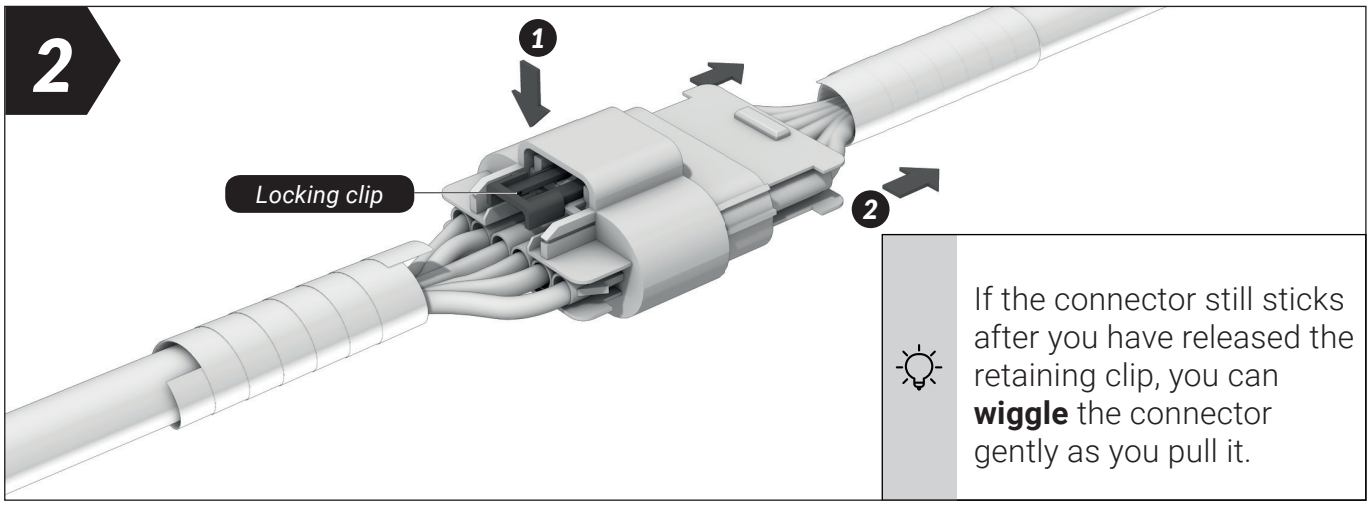

If the connector still sticks after you have released the retaining clip, you can **wiggle** the connector gently as you pull it.

3

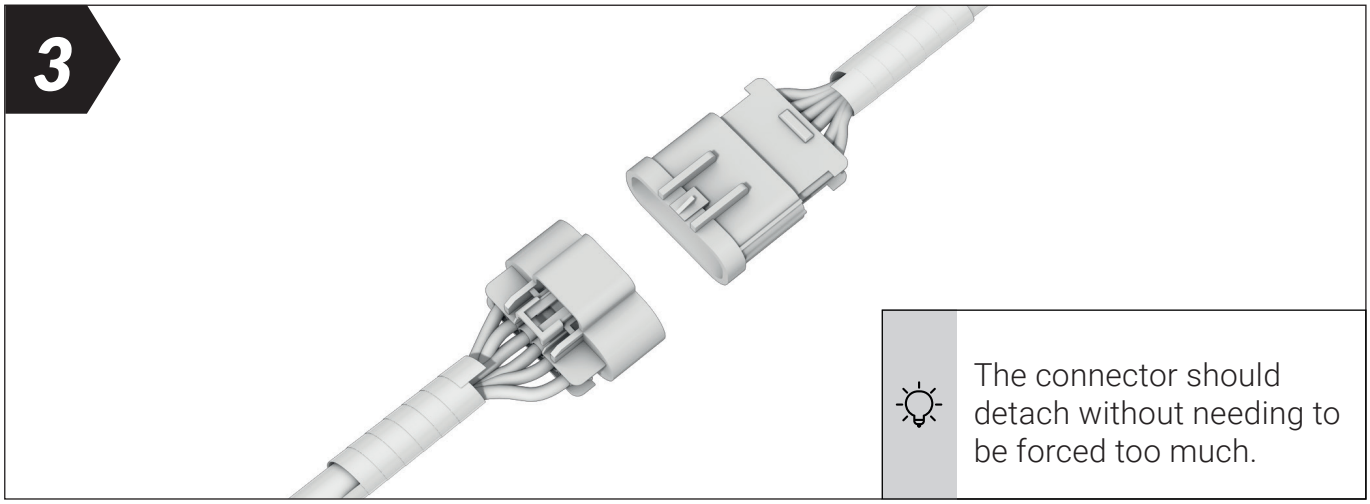

The connector should detach without needing to be forced too much.

Detaching the connector correctly

Connector number CL-X-2901

1

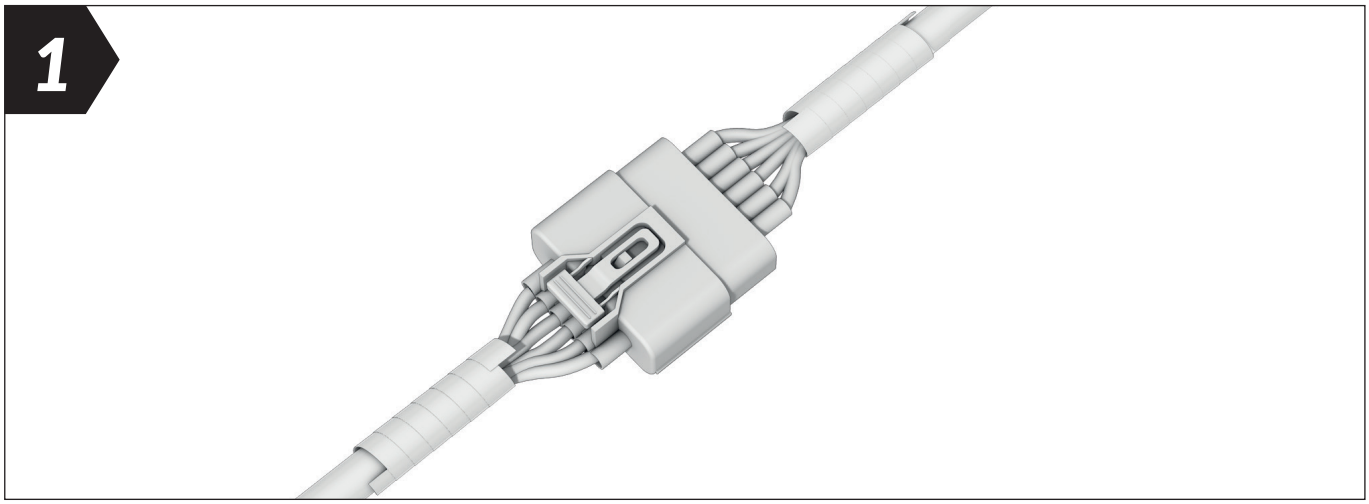

2

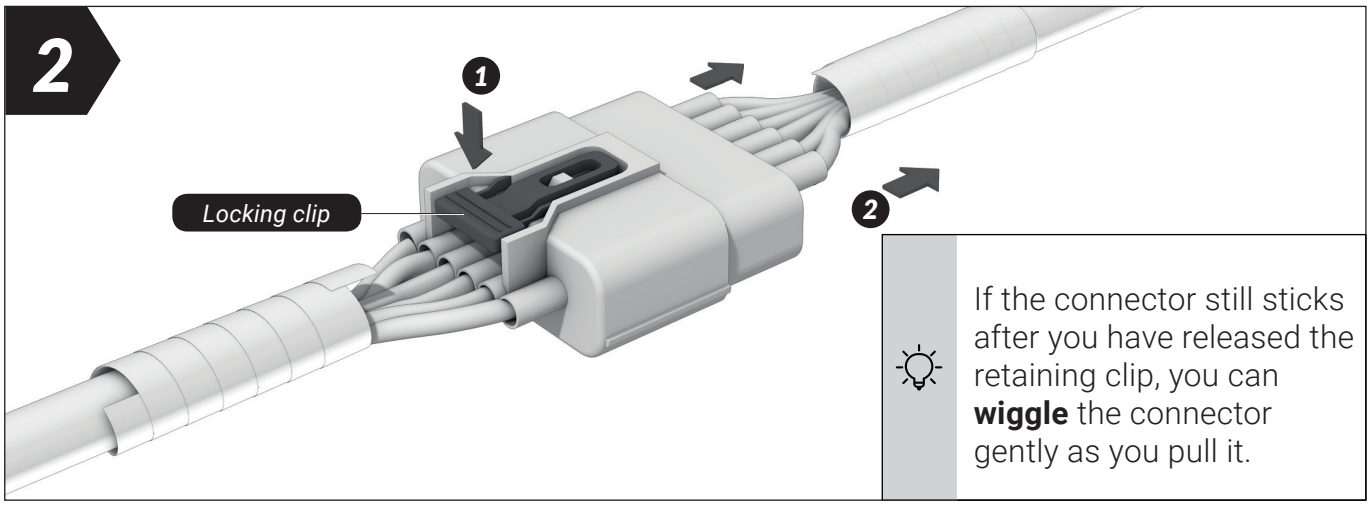

If the connector still sticks after you have released the retaining clip, you can **wiggle** the connector gently as you pull it.

3

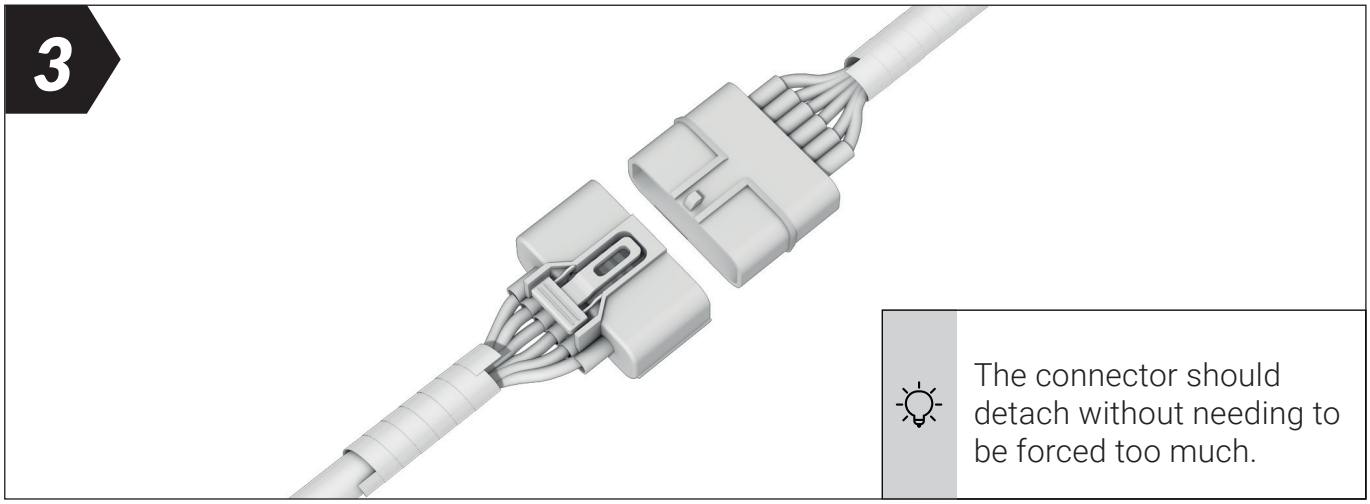

The connector should detach without needing to be forced too much.